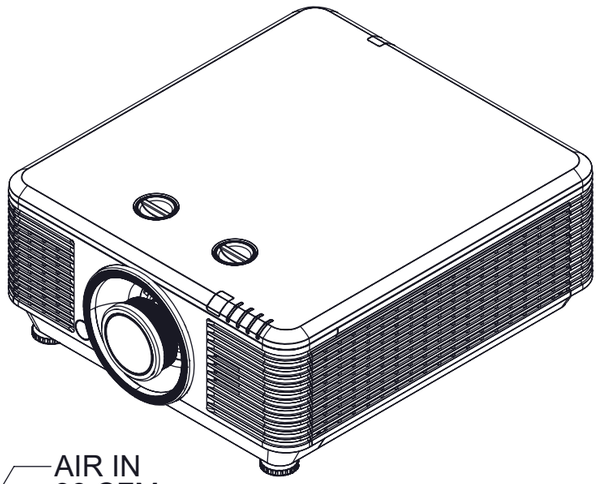
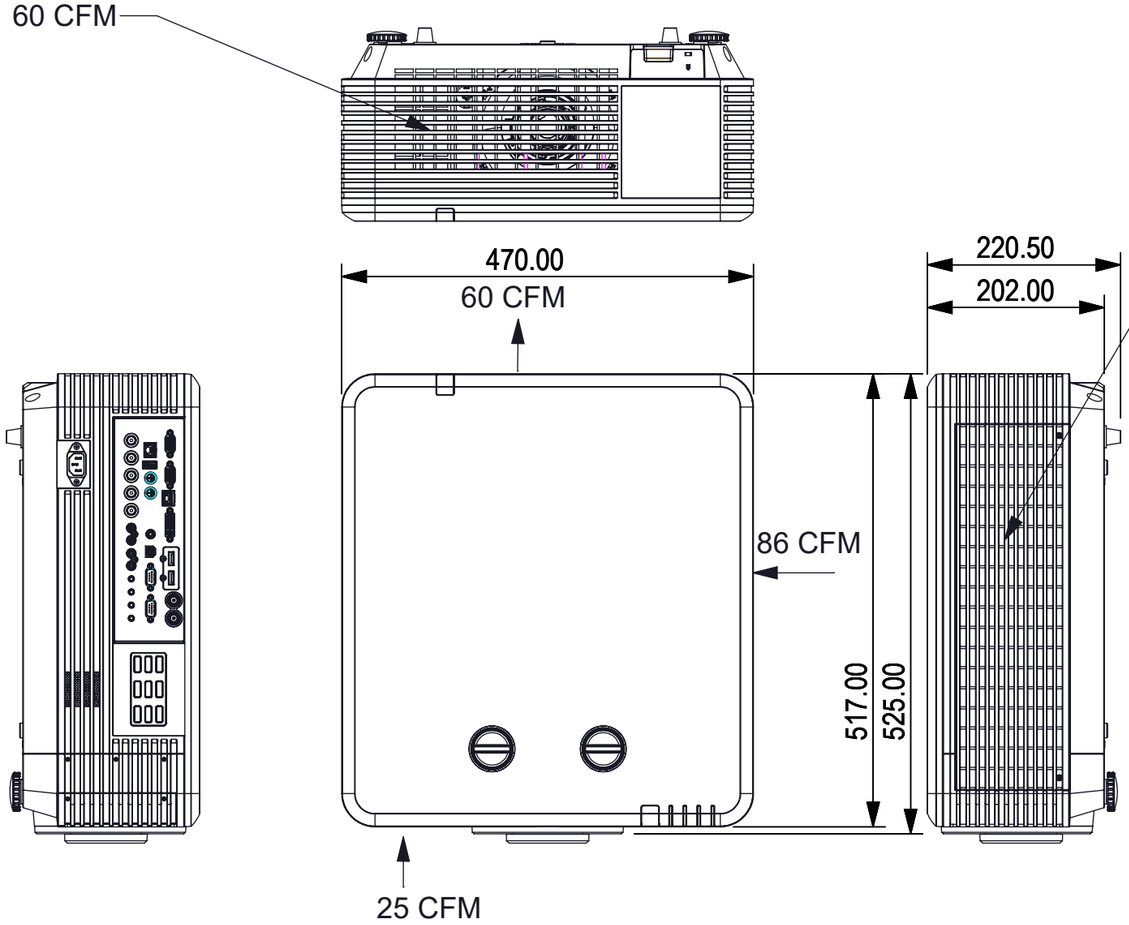
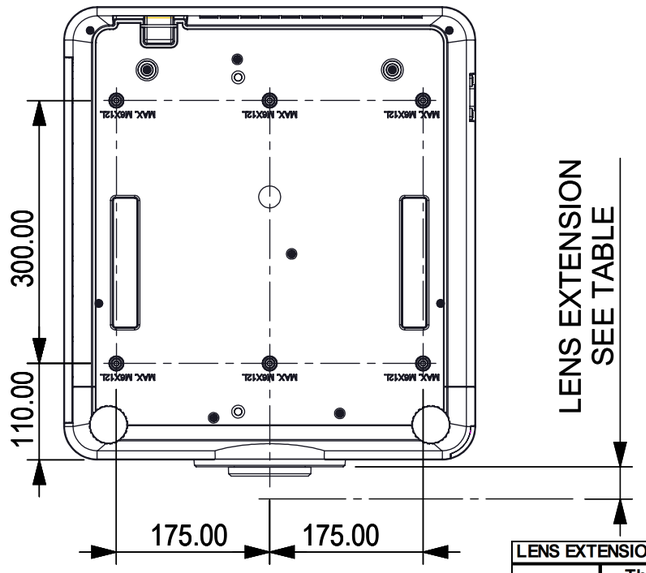
IF IN DOUBT, ASK.







LENS EXTENSION		
DP P/N	Throw Ratio for WUXGA (0.67" DMD) 16:10 Aspect Ratio	Outside Edge Lens Extension
114-785B	0.778:1	-7.59mm
119-001A	0.77 ~ 1.1:1	86.49mm
116-207A	1.10 ~ 1.30:1	72.96mm
119-430A	1.25 ~ 1.60:1	76.8mm
114-783B	1.54 ~ 1.93:1	6.96mm
114-784B	1.93 ~ 2.91:1	21.64mm
116-208A	3.00 ~ 5.00:1	51.52mm

Part No.	Description
119-075	PROJECTOR, E-VISION LASR 6500 II, WUXGA, STANDARD LENS (CHINA)
119-076	PROJECTOR, E-VISION LASR 6500 II, WUXGA, STANDARD LENS (EMEA, ROW)
119-738	PROJECTOR, E-VISION LASER 6500 II, WUXGA, NO LENS (CHINA)
119-739	PROJECTOR, E-VISION LASER 6500 II, WUXGA, DE-POLARISER (CHINA)
120-061	PROJECTOR, E-VISION LASER 6500 II. WUXGA NO LENS (EMEA, ROW)

PROPRIETARY INFORMATION
This document contains proprietary information which is forwarded to you in confidence for a specific purpose.It shall not be reproduced nor transfered to other documents nor disclosed to others,nor used for manufacturing or any other purpose without the prior written permission of Digital Projection Ltd.Shall be returned immediately upon request.

A3 DRG. No.

DRAWN BS 308
3rd Angle Projection

Distribution Code

Last Change
DATE OF ISSUE 1-3-21

3					
2					
1					
ITEM	DESCRIPTION	REFER TO	No Off	REMARKS	
MATERIAL		FINISH			
A					
PRE REVS	CODE				

TOLERANCES UNLESS OTHERWISE STATED
METRIC: 1.000 = ±0.01; 1.00 = ±0.1; 1.0 = ±0.2; 1 = ±0.4
IMPERIAL Fractional ±1/64" Decimal ± 0.005"
ANGLES ± 0° 30'

CAD GENERATED DRAWING. DO NOT MAKE MANUAL CHANGES
Unless Otherwise Stated DIMENSIONS IN MILLIMETRES
REMOVE ALL BURRS & SHARP EDGES. DO NOT SCALE DRAWING
THE SURFACE TEXTURE ROUGHNESS NUMBER OF MACHINED SURFACES SHOULD BE EQUAL TO OR LESS THAN 0.8um (N6 CLA32)

REV.	A					
NOTE						
DRAWN	jcharnley					
APP.DO.						
DATE	01-03-21					

FIRST USED ON

DIGITAL PROJECTION
MIDDLETON M24 1XX

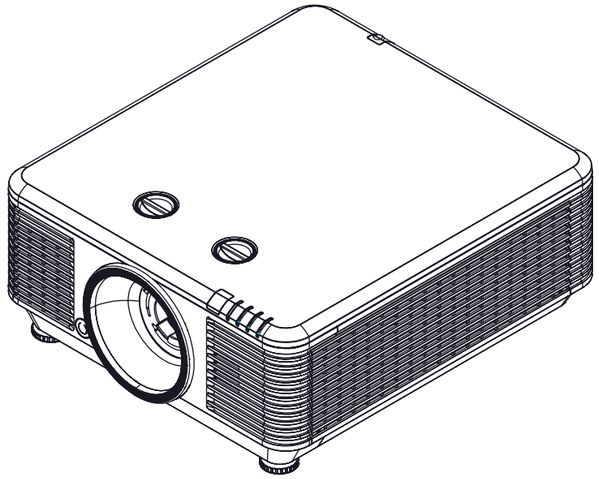
ORIGINAL SCALE 1:7
DRAWN jcharnley
APP.ENG.
DATE 23-11-18

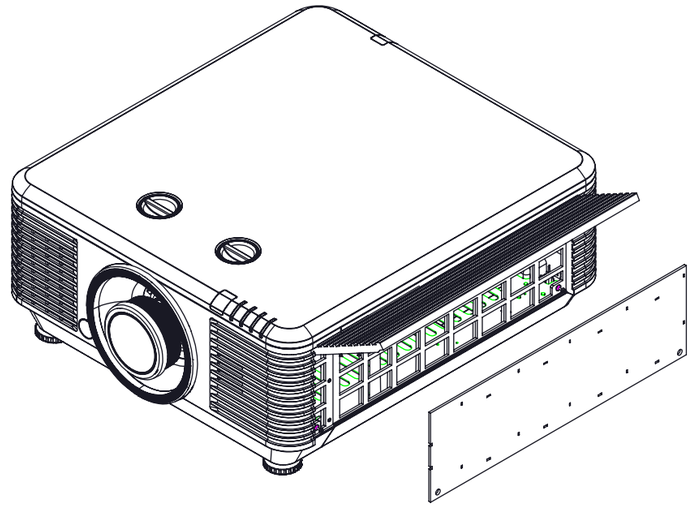
TITLE
SEE ABOVE

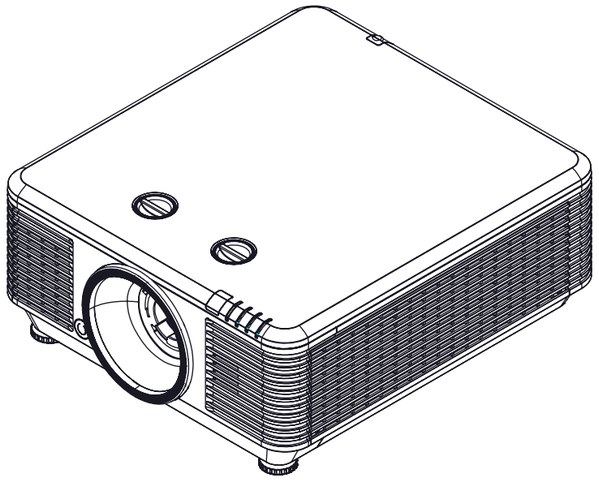
COMPONENT OR DRG.No.
SEE ABOVE

A3:SHEET 1 OF 2

IF IN DOUBT, ASK.







| | | |