EPSON

User's Guide

Multimedia Projector

EB-PU2220B
EB-PU2120W

Contents

Notations Used in This Guide 8

Using the Manual to Search for Information 9
- Searching by Keyword 9
- Jumping Directly from Bookmarks 9
- Printing Only the Pages You Need 9

Getting the Latest Version of the Documents 10

Introduction to Your Projector 11

Projector Parts and Functions 12
- Projector Parts - Front/Top 12
- Projector Parts - Rear 13
- Projector Parts - Interface 14
- Projector Parts - Base 16
  - Installing the Safety Wire 16
- Projector Parts - Control Panel 17
- Projector Parts - Remote Control 19
  - Installing Batteries in the Remote Control 22
  - Remote Control Operation 22
  - Locking the Remote Control Buttons 23
- Projector Parts - External Camera 23

Setting Up the Projector 25

Notes on Transporting 26

Precautions on Installation 27

Attaching and Removing a Lens 30
- Attaching a Lens 30
- Removing a Lens 34

Attaching and Removing the Cable Cover 36

Operating the Projector Power 37
- Turning On the Projector 37
- Turning Off the Projector 38

Wired Network Connection 40
- Connecting to a Wired Network 40
- Selecting Wired Network Settings 40

Wireless Network Connection 42
- Installing the Wireless LAN Module 42
- Selecting Wireless Network Settings Manually 43
- Selecting Wireless Network Settings in Windows 44
- Selecting Wireless Network Settings in Mac 45
- Setting Up Wireless Network Security 45
  - Supported Client and CA Certificates 46
- Using a QR Code to Connect a Mobile Device 47
- Using a USB Key to Connect a Windows Computer 47

Secure HTTP 49
- Importing a Web Server Certificate Using the Menus 49
  - Supported Web Server Certificates 49

Adjusting the Menu Settings 51

Home Screen 52

Using the Projector's Menus 53

Using the Displayed Keyboard 54
- Available Text Using the Displayed Keyboard 54

Using Basic Projector Features 55
- Setting Up the Projector 55
  - Messages 55
  - Standby Confirmation 55
  - Sleep Mode 55
  - Beep 55
  - Indicators 56
  - Date & Time 56
  - Language 56

On-Screen Display 56
Energy Saving Mode 56
Remote Control Type 57
Projecting Images 57
Source Search 57
A/V Mute 57
Shutter 58
Freeze 58
Split Screen 58
Volume 58
Aspect 59
Screen Type 59
Projection 59
Test Pattern 59
Content Playback 60
Display Background 60
Startup Screen 60
Adjusting the Image Position and Shape 60
Lens Shift 60
Zoom 61
H/V-Keystone 61
Quick Corner 61
Curved Surface 62
Corner Wall 62
Point Correction 62
Adjusting the Image Quality 62
Focus/Distortion 62
Color Mode 63
Image Enhancement 63
Gamma 63
RGBCMY 63
Brightness Settings 64
Using Multiple Projectors 64
Tiling 64
Edge Blending 64
Black Level 65
Scale 65
Color Matching 65
Simple Stacking 65
Maintaining the Projector Quality 66
Panel Alignment 66
Color Uniformity 66
Refresh Mode 66
Light Source Calibration 66
Managing the Projector's Settings 66
Memory 67
Schedule Settings 67
Button Lock 67
Lens Lock 68
Password Protection 68

Copying Menu Settings Between Projectors (Batch Setup) 70

Transferring Settings From a USB Flash Drive 70
Transferring Settings From a Computer 71
Batch Setup Error Notification 72

Menu Settings 73

Image Menu 74

Color Mode 74
Brightness 74
Contrast 75
Color Saturation 75
Tint 75
Sharpness 75
White Balance 75
4K Enhancement 75
Image Preset Mode 76
Frame Interpolation 76
Deinterlacing 77
Noise Reduction 77
MPEG Noise Reduction 77
Super-resolution 77
Detail Enhancement 78
Reset (Image Enhancement) 78

Scene Adaptive Gamma 78
Gamma 78
RGBCMY 78
Dynamic Contrast 79
Lights-Out Control 79
Reset (Image menu) 79

Signal Menu 80

Resolution 80
Aspect 80
Tracking 81
Sync. 81
Position 81
Auto Setup 81
Overscan 82
Blanking 82
Color Space 82
Dynamic Range 82
Video Range 83
EDID 83
Scale 83
Reset (Signal menu) 84

Settings Menu 85

Geometry Correction 85
Split Screen 86
Split Screen Projection Restrictions 86
Volume 87
HDMI Link 87
Control Panel Lock 88
Lens Lock 88
Light Source Mode 88
Brightness Level 88
Constant Brightness 89
Estimated Remains 89
Constant Brightness Usage Hours 89
Light Source Operation Time 90
Energy Saving Mode 90
Remote Receiver 91
User Button 91
Test Pattern 91
Memory 92
Content Playback 92
Creating Playlists Using Epson Web Control 93
Supported Content Playback Mode File Types 94
Content Playback Mode Restrictions 95
NFC Settings 95
Reset (Settings menu) 95

Extended Menu 96

Home Screen 96
Menu Position 96
Message Position 97
Messages 97
Display Background 97
Startup Screen 97
Standby Confirmation 97
Screen 97
Panel Alignment 98
Color Uniformity 98
OSD Rotation 99
User's Logo 99
Projection 99
Direct Power On 99
Sleep Mode 99
Sleep Mode Timer 99
High Altitude Mode 100
Auto Source Search 100
Auto Power On 100
Startup Source 100
Quick Startup 100
USB Power 100
A/V Mute Settings 101
Shutter Settings 101
Remote Control Type 101
Beep 102
Indicators 102

Log Save Destination 102
Batch Setup Range 102
AC Voltage Monitoring 102
Date & Time 102
Lens Calibration 103
A/V Settings 103
Standby Mode 103
HDBaseT 103
Color Calibration 104
Conditions for Color Calibration 104
Projector ID 104
Projector Grouping 105
Tiling 105
Edge Blending 105
Black Level 106
Reset (Multi-Projection menu) 106
Screen Matching 107
Conditions for Screen Matching 107
Color Matching 107
Simple Stacking 108
Conditions for Simple Stacking 108
Schedule Settings 109
Schedule Status Icons 109
Language 110
Reset (Extended menu) 110

Network Menu 111

Wireless Mode 111
Net. Info. - Wireless LAN 112
Net. Info. - Wired LAN 112
Display the QR Code 112
Remote Camera Access 112
Projector Name 112
PJLink Password 112
Remote Password 112
Web Control Password 113
Moderator Password 113
Projector Keyword 113
Display Keyword 113
Display LAN Info. 113
Connection Mode 113
Search Access Point 113
SSID 114
Security 114
Passphrase 114
EAP Method 115
Channel 115
IP Settings 115
SSID Display 116
IP Address Display 116
IPv6 Settings 116
Mail Notification 116
Network Projector E-mail Alert Messages 117
SMTP Server 117
Port Number 117
From 117
Address 1 Setting/Address 2 Setting/Address 3 Setting 117
SNMP 117
Trap IP Address 1/Trap IP Address 2 118
Community Name 118
PJLink Notification 118
Notified IP Address 118
Command Communication 118
Secure HTTP 118
Web Server Certificate 118
Web API Settings 119
Priority Gateway 119
Basic Control 119
PJLink 119
AMX Device Discovery 119
Crestron Connected 119
Art-Net 119
Message Broadcasting 120
Reset (Network menu) 120

Info Menu 121

Projector Info 121
Event ID Code List 121
Light Source Info 122
Version 122
Status Information 123
Voltage Warning Info 123
Temp Warning Info 123
Power On/Off History 123
Export Batch Settings 123
Import Batch Settings 123

Reset Menu 124

Reset All Memories 124
Refresh Mode 124
Light Source Calibration 124
Reset All Config 125
Reset All (Factory Default) 125

Adjusting Projector Features 127

Multi-Projection Features 128

Procedure Overview 128
Preparing for Multi-Projection 128
Initializing Projectors 128
Assigning a Master Projector 129
Calibrating Projectors 129
Installing Projectors 129
Performing Rough Image Adjustments 130
Connecting Projectors to a Network 130
Image Composition 130
Tiling Using the Epson Projector Professional Tool Software 131
Tiling Using the Projector's Menu 131
Stacking Using the Epson Projector Professional Tool Software 135
Stacking Using the Projector's Menu 136
Adjusting Colors 137

External Camera Usage 138

Monitoring and Controlling the Projector 139

Projector Monitoring and Control Options 140

Epson Projector Management 140
Epson Web Control 140
SNMP 140
ESC/VP21 Commands 140
ESC/VP.net Commands 141
PJLink 141
Art-Net 141
Crestron Connected Support 141
Web API 142

Accessing a Networked Projector Using a Web Browser 143

Web Control Options 144

Maintaining the Projector 154

Projector Maintenance 155

Cleaning the Lens 156

Cleaning the Projector Case 157

Cleaning the Air Intake Vents 158

Solving Problems 159

Projection Problems 160

Projector Indicator Status 161

Projector Status Display Messages 164

Solving Image or Sound Problems 169

Solutions When No Image Appears 169
Solutions When "No Signal" Message Appears 169
Displaying From a Windows Laptop 170

Displaying From a Mac Laptop 170
Solutions When "Not Supported" Message Appears 170
Solutions When Only a Partial Image Appears 170
Solutions When the Image is not Rectangular 171
Solutions When the Image Contains Noise or Static 171
Solutions When the Image is Fuzzy or Blurry 172
Solutions When the Image Brightness or Colors are Incorrect 172
Solutions When Automatic Adjustments are not Applied Correctly 173
Solutions When Simple Stacking is not Applied Correctly 173
Solutions When an Afterimage Remains on the Projected Image 174
Solutions to Sound Problems 174

Solving Projector or Remote Control Operation Problems 175

Solutions to Projector Power or Shut-Off Problems 175
Solutions to Problems with the Remote Control 175
Solutions to Password Problems 176
Solution When "The Battery that Saves Your Clock Settings is Running Low" Message Appears 176

Solutions to Problems in Content Playback Mode 177

Solving Network Problems 178

Solutions When Wireless Authentication Fails 178
Solutions When You Cannot Access the Projector Through the Web 178
Solutions When Network Alert E-Mails are not Received 178
Solutions When the Image Contains Static During Network Projection 179
Solutions When You Cannot Monitor and Control the Projector over a Network . 179

Appendix 180

Optional Accessories and Replacement Parts 181

Lens 181
Mounts 181
External Devices 181
For Wireless Connection 182

Screen Size and Projection Distance 183

Projection Distance Formula 183
Projection Distance 187

Projector Specifications 195

Supported Features for Epson Projector Content Manager 197

List of Safety Symbols and Instructions 198

Laser Safety Information 200

Laser Warning Labels 200

Hazard Distance according to IEC62471-5 202

Notices 203

FCC Compliance Statement 203
Indication of the manufacturer and the importer in accordance with requirements of EU directive 204
Restriction of Use 204
Operating System References 204
Trademarks 204
Copyright Notice 205
Copyright Attribution 205

Notations Used in This Guide

Safety Symbols

The projector and its manuals use graphical symbols and labels to indicate content that tells you how to use the projector safely.
Read and carefully follow the instructions that are marked with these symbols and labels to avoid injury to persons or damage to property.

⚠ Warning	This symbol indicates information that, if ignored, could possibly result in personal injury or even death.
⚠ Caution	This symbol indicates information that, if ignored, could possibly result in personal injury or physical damage due to incorrect handling.

General Information Notations

Attention	This label indicates procedures that may result in damage or injury if sufficient care is not taken.
	This label indicates additional information that may be useful to know.
[Button name]	Indicates the name of the buttons on the remote control or the control panel. Example: [Esc] button
Menu/Setting name	Indicates projector menu and setting names. Example: Select the **Image** menu
⏩	This label indicates links to the related pages.
☛	This label indicates the projector's current menu level.

⏩ Related Links

- "Using the Manual to Search for Information" p.9
- "Getting the Latest Version of the Documents" p.10

We assume that this manual will be used by specialists with technical knowledge and experience of projector installation and adjustment.

Make sure you read the *Safety Instructions* before using your projector.

The PDF manual allows you to search for information you are looking for by keyword, or jump directly to specific sections using the bookmarks. You can also print only the pages you need. This section explains how to use a PDF manual that has been opened in Adobe Reader X on your computer.

Related Links

- "Searching by Keyword" p.9
- "Jumping Directly from Bookmarks" p.9
- "Printing Only the Pages You Need" p.9

Searching by Keyword

Click **Edit** > **Advanced Search**. Enter the keyword (text) for information you want to find in the search window, and then click **Search**. Hits are displayed as a list. Click one of the displayed hits to jump to that page.

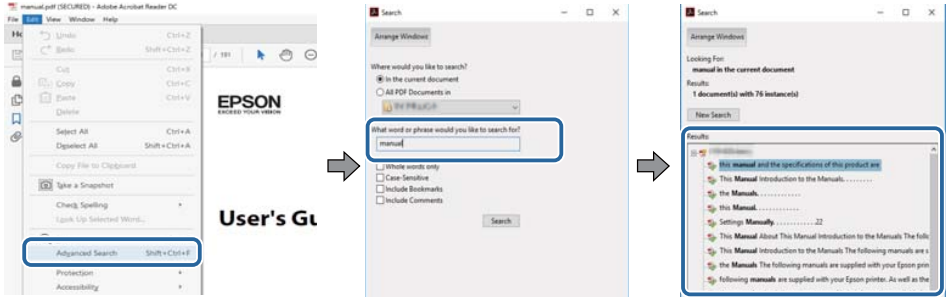

Jumping Directly from Bookmarks

Click a title to jump to that page. Click + or > to view the lower level titles in that section. To return to the previous page, perform the following operation on your keyboard.

- Windows: Hold down **Alt**, and then press ←.
- Mac OS: Hold down the command key, and then press ←.

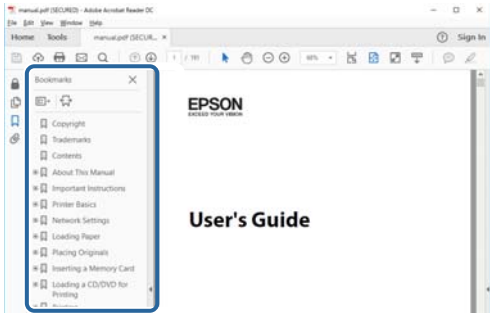

Printing Only the Pages You Need

You can extract and print only the pages you need. Click **Print** in the **File** menu, and then specify the pages you want to print in **Pages** in **Pages to Print**.

- To specify a series of pages, enter a hyphen between the start page and the end page.

  Example: 20-25

- To specify pages that are not in series, divide the pages with commas.

  Example: 5, 10, 15

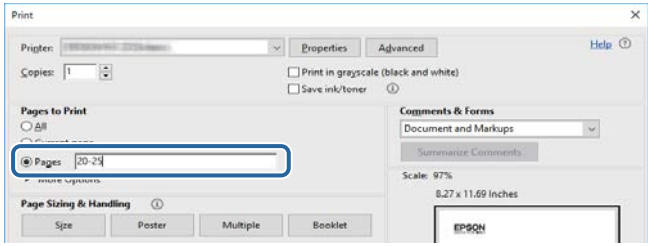

Getting the Latest Version of the Documents

You can get the latest version of the manuals and specifications on the Epson Web site.

Visit epson.sn, and enter your model name.

Introduction to Your Projector

See these sections to learn more about your projector.

Related Links

- "Projector Parts and Functions" p.12

The following sections explain the projector parts and their functions.

Related Links

- "Projector Parts - Front/Top" p.12
- "Projector Parts - Rear" p.13
- "Projector Parts - Interface" p.14
- "Projector Parts - Base" p.16
- "Projector Parts - Control Panel" p.17
- "Projector Parts - Remote Control" p.19
- "Projector Parts - External Camera" p.23

Projector Parts - Front/Top

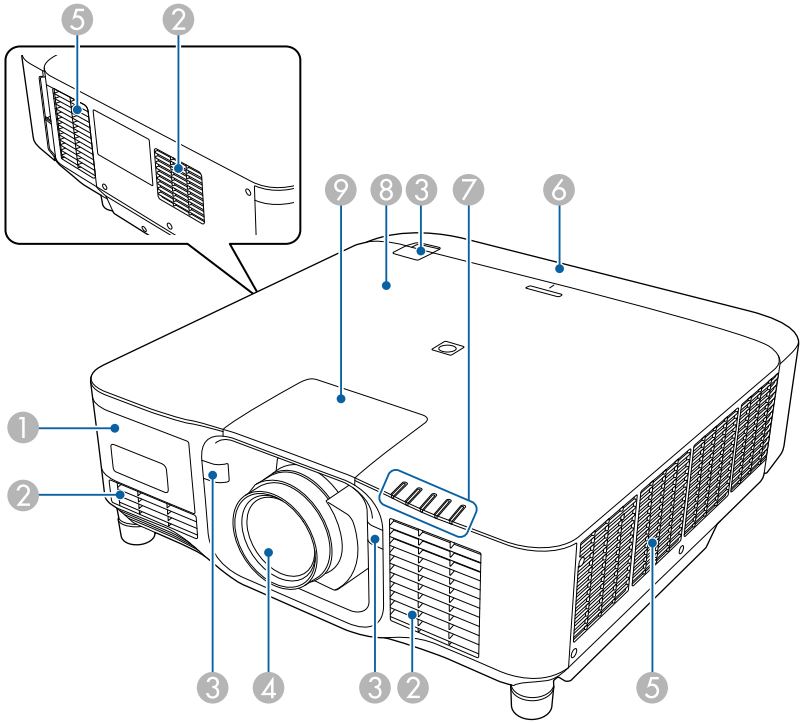

Name		Function
1	External camera cover	Open this cover to install the optional external camera. When using the ultra short-throw zoom lens, install the optional external camera on the lens.
2	Air intake vent	Takes in air to cool the projector internally.
3	Remote receivers	Receive signals from the remote control.
4	Lens	Images are projected from here. **⚠ Warning** Do not look into the projection lens while projecting. **⚠ Caution** Do not place any objects or put your hand near the projection lens. It could cause burns, fire, or the object to warp because this area reaches a high temperature due to the concentrated projection light.
5	Air exhaust vent	Exhaust vent for air used to cool the projector internally. **⚠ Caution** While projecting, do not put your face or hands near the air exhaust vent, and do not place objects that may become warped or damaged by heat near the vent. Hot air from the air exhaust vent could cause burns, warping, or accidents to occur.
6	Cable cover	Cover for the rear interface ports section.
7	Indicator lights	Indicate the projector's status.

Name		Function
8	NFC tag	Uses NFC technology to transfer projector information through your mobile device. The Projector Config Tool app lets you scan projector information and write settings. You can download the Projector Config Tool app for free from the App Store or Google Play. Any fees incurred when communicating with the App Store or Google Play are the responsibility of the customer.
9	Lens replacement cover	Remove when attaching or removing the lens.

Related Links
- "Projector Indicator Status" p.161
- "Attaching and Removing the Cable Cover" p.36
- "Attaching and Removing a Lens" p.30

Projector Parts - Rear

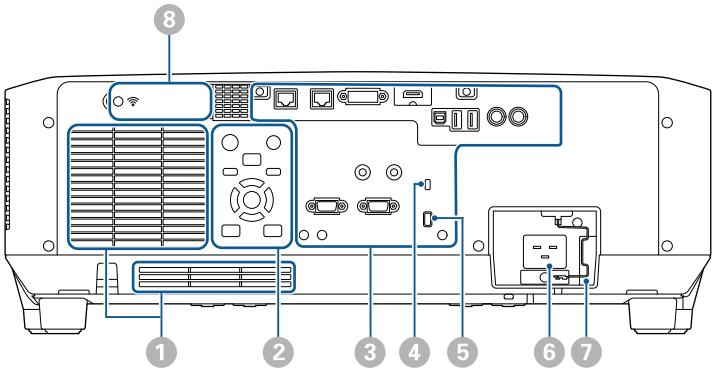

Name		Function
1	Air intake vent	Takes in air to cool the projector internally.
2	Control panel	Operates the projector.
3	Connector ports	Connects interface cables.
4	Security slot	The security slot is compatible with the Microsaver Security System manufactured by Kensington. For more details on the Microsaver Security System, visit the Kensington Web site. https://www.kensington.com/
5	Cable holder	Pass a commercially available cable tie through here to secure cables. **⚠ Warning** Do not bundle the power cord to the other cables. Otherwise, a fire may occur.
6	Power inlet	Connects the power cord to the projector.
7	Cable lock	Secures the power cord to prevent it from falling off.
8	Wireless LAN module cover	Open this cover to install the wireless LAN module.

Related Links
- "Installing the Wireless LAN Module" p.42

Projector Parts - Interface

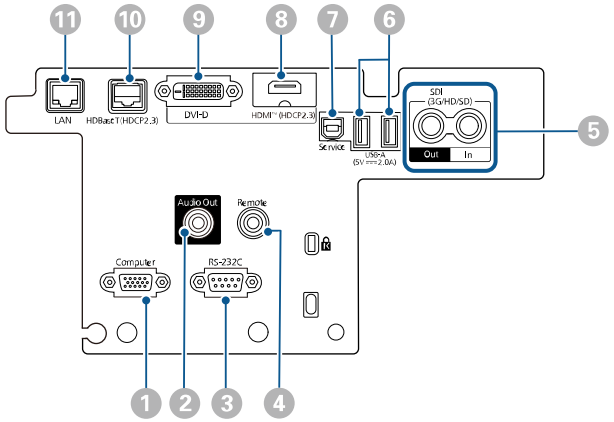

Attention

- Check the shape and orientation of the connectors on any cable you plan to connect. Do not force a connector into a port if it does not fit. The device or your projector could be damaged or could malfunction.
- Do not turn on the input source before connecting it to the projector. Doing so could damage the projector.
- If necessary, use an adapter that allows you to connect to an input port on the projector.

Name		Function
1	Computer port (Mini D-Sub15-pin, female)	Inputs image signals from a computer.

Name		Function
2	Audio Out port (Stereo mini pin jack)	Outputs audio from the current input source to an external speaker. You can also connect the projector to an amplifier with speakers. To output audio from the speaker connected to this port, select **Projector** as the **Audio Out Device** setting in the projector's **Settings** menu. When an audio/video system is not connected to the projector, audio is output from the speaker connected to this port even if **Audio Out Device** is set to **AV System**. ☛ **Settings** > **HDMI Link** > **Audio Out Device** If you want to output audio for the HDMI source from the external speakers when the projector is turned off, select **Always On** as the **A/V Output** setting in the projector's **Extended** menu. ☛ **Extended** > **A/V Settings** > **A/V Output**
3	RS-232C port (Mini D-Sub 9-pin, male)	Use to connect an RS-232C cable to control the projector from a computer.
4	Remote port (Stereo mini pin jack)	Connects the remote control to the projector using a commercially available 3.5 mm stereo mini-jack audio cable and inputs signals from the remote control. When the remote control is connected, the remote receiver on the projector is disabled.

Name		Function
⑤	SDI Out/In ports (BNC)	(EB-PU2220B only) Inputs video signals from SDI compatible video equipment. Outputs video signals input from the SDI In port to an external monitor. You can connect two projectors in a chain using a SDI cable. If you want to output images to an external monitor when the projector is turned off, select **Always On** as the **A/V Output** setting in the projector's **Extended** menu. ☛ **Extended** > **A/V Settings** > **A/V Output**
⑥	USB-A port (USB connector Type A)	Use to connect a USB memory device for projecting movies or images in Content Playback mode. It is also used for batch settings and firmware update. Use to connect the optional camera when using the optional ultra short-throw zoom lens. Provides a connection for a streaming media player to power it. **Attention** • Use the USB cable supplied with or specified for use with the device. • Do not connect a USB hub or a USB cable longer than 3 meters, or the device may not operate correctly.
⑦	Service port (USB connector Type B)	This port is used for batch settings and firmware update.

Name		Function
⑧	HDMI port (HDMI)	Inputs video signals from HDMI compatible video equipment and computers. Connects the optional base unit of the Epson Wireless Presentation System. This port is compatible with HDCP2.3. (Audio is only supported by PCM)
⑨	DVI-D port (DVI-D 24-pin single)	Inputs the computer DVI-D signals. This port is compatible with HDCP1.4.
⑩	HDBaseT port (RJ-45)	Use to connect a LAN cable to the optional HDBaseT Transmitter. You can use a network cable up to 100 m in length. To ensure proper data transmission, use a Category 5e STP cable or better. However, operation is not guaranteed for all input/output devices and environments. This port is compatible with HDCP2.3. Check the following settings: • To enable communication from the Ethernet and serial ports on the transmitter, select **On** as the **Control Communications** setting in the projector's **Extended** menu. ☛ **Extended** > **HDBaseT** > **Control Communications** • If you have connected an Extron XTP transmitter or switcher, select **On** as the **Extron XTP** setting in the projector's **Extended** menu. ☛ **Extended** > **HDBaseT** > **Extron XTP**
⑪	LAN port (RJ-45)	Use to connect a LAN cable to connect to a network. Use a 100Base-TX or 10Base-T network cable. To ensure proper data transmission, use a Category 5 shielded cable or better.

Projector Parts - Base

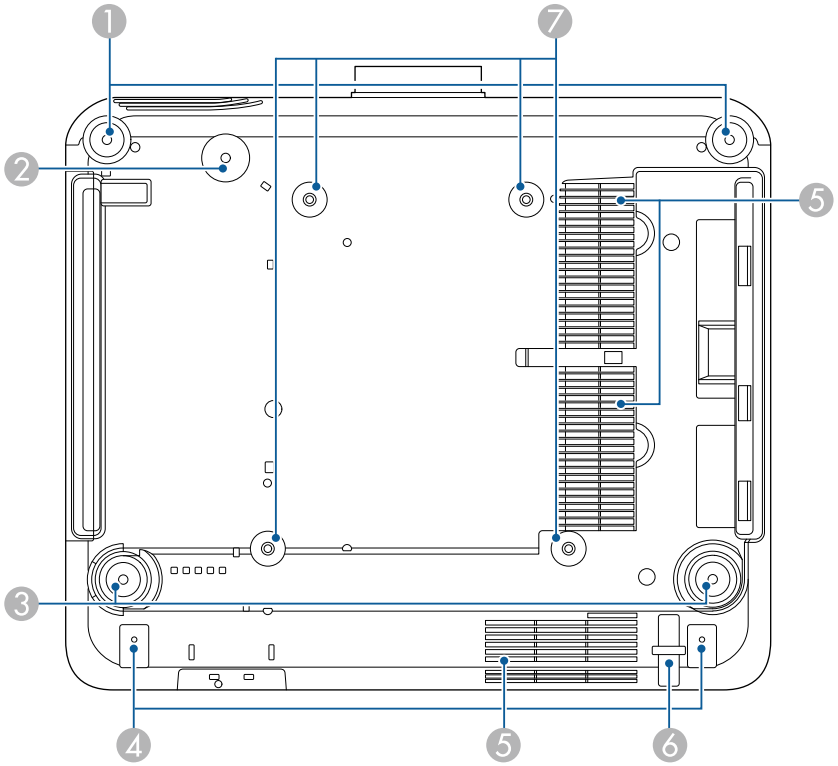

Name		Function
1	Front feet	When the projector is set up on a surface such as a desk, turn to extend and retract the feet to adjust the horizontal tilt. You can adjust the tilt within a range of ±5°. The front feet are detachable. You can extend the feet by approximately 35 mm before they detach.
2	Screw hole (for the ring of the safety wire)	Screw hole for securing the ring of the safety wire to prevent the projector from falling from the ceiling or wall.
3	Rear feet	When the projector is set up on a surface such as a desk, turn to extend and retract the feet to adjust the horizontal tilt. You can adjust the tilt within a range of ±5°. The rear feet are detachable. You can extend the feet by approximately 35 mm before they detach.
4	Screw holes (for the cable cover)	The screw holes for securing the cable cover. Make sure the cables have been passed through the notch on the base of the cable cover before attaching the cable cover.
5	Air intake vent	Takes in air to cool the projector internally.
6	Security cable attachment point	Pass the theft-prevention wire lock through here and lock it in place.
7	Ceiling mount fixing points (ELPMB67, 4 points)	Use all of these points to attach the optional ceiling mount when installing the projector on a wall, or mounting the projector from a ceiling.

Related Links

- "Installing the Safety Wire" p.16

Installing the Safety Wire

When you use the optional ceiling mount, you can install the safety wire to prevent the projector from falling from the ceiling.

Secure the ring using the M6 × 15 mm bolt supplied with the safety wire set, and loop the safety wire through the ceiling mount to secure it as shown.

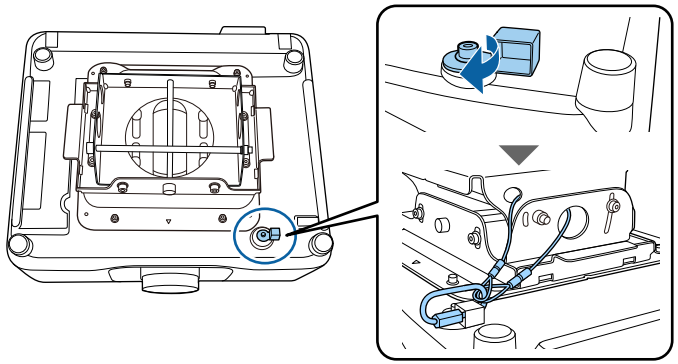

Projector Parts - Control Panel

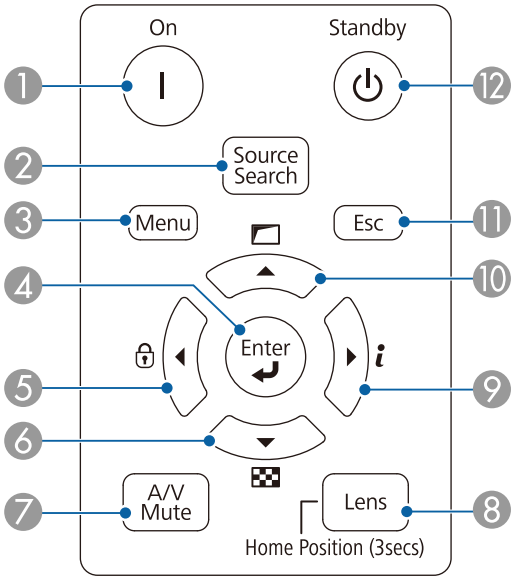

Name		Function
1	[On] button	Turns the projector on.

Name		Function
2	[Source Search] button	Changes to the next input source.
3	[Menu] button	Displays and closes the projector's menu.
4	[Enter] button [↵]	Enters the current selection and moves to the next level while displaying the projector's menu. When projecting an analog RGB signal from the Computer port, optimizes the **Tracking**, **Sync.**, and **Position** settings in the projector's **Signal** menu.
5	Control panel lock button and arrow button	Displays the **Control Panel Lock** screen allowing you to lock the control panel buttons. Do one of the following to unlock them. • Set the **Control Panel Lock** setting to **Off**. ☛ **Settings** > **Lock Setting** > **Control Panel Lock** • Hold down the [Enter] button on the control panel for more than 7 seconds. Selects menu items while displaying the projector's menu.
6	Test pattern button and arrow button	Displays a test pattern. The test pattern's shape is determined by the **Screen Type** setting. Be sure to set the correct screen type before adjusting with the test pattern. ☛ **Extended** > **Display** > **Screen** > **Screen Type** Selects menu items while displaying the projector's menu.

Name		Function
⑦	[A/V Mute] button	**EB-PU2220B:** Turns the video and audio on or off temporarily by opening/closing the mechanical shutter. The projector's power automatically turns off two hours after the shutter function is enabled. You can disable this feature. ☛ **Extended** > **Operation** > **Shutter Settings** > **Shutter Timer** **EB-PU2120W:** Turns the video and audio on or off temporarily. The projector's power automatically turns off two hours after A/V Mute is enabled. You can disable this feature. ☛ **Extended** > **Operation** > **A/V Mute Settings** > **A/V Mute Timer**
⑧	[Lens] button	Displays the adjustment screens for lens shift, zoom, focus, and distortion in that order each time the button is pressed. Wait 20 minutes after turning on the projector before setting the focus, zoom, and lens shift for maximum accuracy. When adjusting the image position using vertical lens shift, adjust it by moving the image from the bottom to the top. If you adjust it from the top to the bottom, the image position may move down slightly after adjusting. Hold down this button for more than 3 seconds to move the lens position to the home position. Keep the lens position in the home position for the clearest picture.
⑨	Information button [i] and arrow button	Displays the projector's **Info** menu. Selects menu items while displaying the projector's menu.
⑩	Geometry correction button and arrow button	Corrects the shape of the image using the options in the **Geometry Correction** setting. Selects menu items while displaying the projector's menu.

Name		Function
⑪	[Esc] button	Stops the current function. Moves back to the previous menu level while displaying the projector's menu.
⑫	[Standby] button	Turns the projector off.

Related Links

- "Geometry Correction" p.85
- "Button Lock" p.67
- "Test Pattern" p.59
- "A/V Mute" p.57
- "Shutter" p.58

Projector Parts - Remote Control

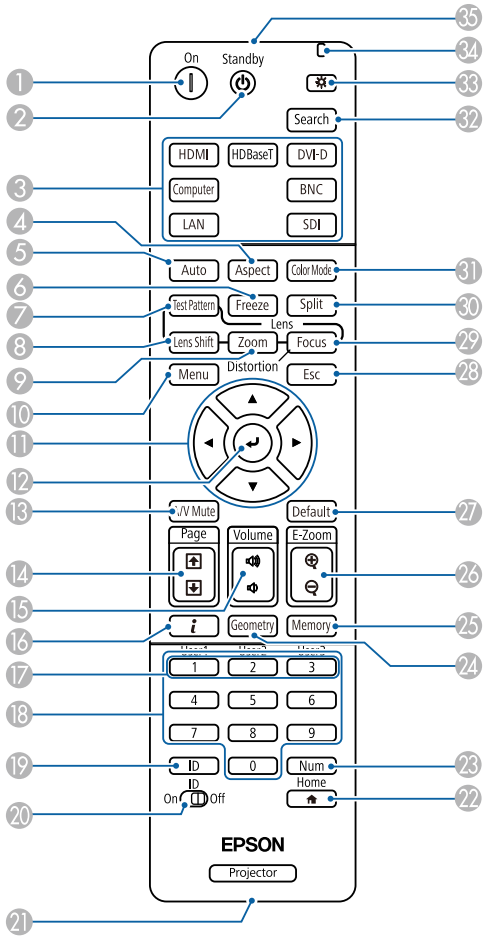

Name		Function
1	[On] button	Turns the projector on.
2	[Standby] button	Turns the projector off.

Name		Function
3	Switch image source buttons	Switch the image source to each port.
4	[Aspect] button	Changes the aspect mode. You cannot change the aspect mode when the current source is LAN. Note that using the aspect ratio function of the projector to reduce, enlarge, or split the projected image for commercial purposes or for public viewing may infringe upon the rights of the copyright holder of that image based on copyright law.
5	[Auto] button	When projecting an analog RGB signal from the Computer port, optimizes the **Tracking**, **Sync.**, and **Position** settings in the projector's **Signal** menu.
6	[Freeze] button	Pauses or resumes images. Any sound or video action continues to run, however, so you cannot resume projection at the point that you stopped it. Hold down this button for more than 5 seconds to set up password security.
7	[Test Pattern] button	Displays a test pattern. The test pattern's shape is determined by the **Screen Type** setting. Be sure to set the correct screen type before adjusting with the test pattern. ☛ **Extended** > **Display** > **Screen** > **Screen Type**
8	[Lens Shift] button	Adjusts the position of the projected image. Wait 20 minutes after turning on the projector before setting the focus, zoom, and lens shift for maximum accuracy. When adjusting the image position using vertical lens shift, adjust it by moving the image from the bottom to the top. If you adjust it from the top to the bottom, the image position may move down slightly after adjusting. Hold down this button for more than 3 seconds to move the lens position to the home position. Keep the lens position in the home position for the clearest picture.

Name		Function
⑨	[Zoom] button	Adjusts the image size.
⑩	[Menu] button	Displays and closes the projector's menu. Hold down this button for more than 15 seconds to turn on all remote receivers.
⑪	Arrow buttons	Selects menu items while displaying the projector's menu.
⑫	[Enter] button [↵]	Enters the current selection and moves to the next level while displaying the projector's menu.
⑬	[A/V Mute] button	**EB-PU2220B:** Turns the video and audio on or off temporarily by opening/closing the mechanical shutter. The projector's power automatically turns off two hours after the shutter function is enabled. You can disable this feature. ☛ **Extended** > **Operation** > **Shutter Settings** > **Shutter Timer** Hold down this button for more than 5 seconds to flip the image over top-to-bottom. **EB-PU2120W:** Turns the video and audio on or off temporarily. The projector's power automatically turns off two hours after A/V Mute is enabled. You can disable this feature. ☛ **Extended** > **Operation** > **A/V Mute Settings** > **A/V Mute Timer** Hold down this button for more than 5 seconds to flip the image over top-to-bottom.
⑭	[Page] up/down buttons	Display the previous or next test pattern while displaying a test pattern. Controls page up and down on your computer when you connect a projector and computer over the network.

Name		Function
⑮	[Volume] up/down buttons	Adjusts the volume of the speaker connected to the projector's Audio Out port. **⚠ Caution** Do not start a presentation at a high volume setting. Sudden loud noises may cause hearing loss. Always lower the volume before powering off, so that you can power on and then gradually increase the volume.
⑯	Information button [i]	Displays the projector's **Info** menu.
⑰	[User] buttons	Perform settings assigned in the **User Button** setting in the projector's **Settings** menu.
⑱	Numeric buttons	Enters numbers in the projector's menu while holding down the [Num] button. In Content Playback mode, enter numbers while holding down the [Num] button to play back your favorite playlists.
⑲	[ID] button	Press this button and press a number button within 5 seconds to select the ID for the projector you want to operate using the remote control. (Enter a one-digit or two-digit number.) If you do not know the projector's ID, press this button during projection to temporarily display the projector's ID and the remote control's ID on the screen.
⑳	[ID] switch	Enables (On) or disables (Off) ID settings for the remote control.

Name		Function
㉑	Remote port	Connects the remote control to the projector using a commercially available 3.5 mm stereo mini-jack audio cable and inputs signals from the remote control. When the remote control is connected, the remote receiver on the projector is disabled.
㉒	[Home] button	Displays and closes the Home screen. Hold down this button for more than 5 seconds to lock or unlock the remote control buttons.
㉓	[Num] button	Hold down this button to enter numbers using the numeric buttons.
㉔	[Geometry] button	Displays the **Geometry Correction** screen allowing you to correct keystone distortion of the projected image.
㉕	[Memory] button	Displays the **Memory** screen where you can save customized settings and load saved settings. A memory name that has already been used is indicated by a blue mark. Saving over a previously saved memory overwrites the settings with your current settings.
㉖	[E-Zoom] +/– buttons	Resizes the projected image without changing the projection size. This feature is unavailable if the **Scale** setting is enabled in the projector's menu. ☛ **Signal** > **Scale** ☛ **Extended** > **Multi-Projection** > **Scale**
㉗	[Default] button	Returns the selected setting to its default value. Hold down this button for more than 3 seconds to start the lens calibration process.
㉘	[Esc] button	Stops the current function. Moves back to the previous menu level while displaying the projector's menu.
㉙	[Focus] button	Displays the screen where you can adjust the focus and distortion in the projected image.

Name		Function
㉚	[Split] button	Projects two images from different image sources simultaneously by splitting the projected screen. While using the split screen feature, other projector features may not be available and some settings may be automatically applied to all images. You cannot perform split screen projection when the **Content Playback** setting is set to **On** in the projector's **Settings** menu. Some input source combinations are not supported for split screen projection.
㉛	[Color Mode] button	Changes the color mode.
㉜	[Search] button	Switches to the next input source.
㉝	Illumination button [☼]	Illuminates the buttons on the remote control for approximately 15 seconds. This is useful when using the remote control in the dark.
㉞	Indicator	A light is emitted when outputting remote control signals.
㉟	Remote control light emitting area	Outputs remote control signals.

Related Links

- "Installing Batteries in the Remote Control" p.22
- "Remote Control Operation" p.22
- "Locking the Remote Control Buttons" p.23
- "Password Protection" p.68
- "Home Screen" p.52
- "Geometry Correction" p.85
- "Memory" p.92
- "Split Screen" p.86
- "Test Pattern" p.59
- "A/V Mute" p.57
- "Shutter" p.58

Installing Batteries in the Remote Control

The remote control uses the two AA batteries that came with the projector.

Attention

Make sure you read the *Safety Instructions* before handling the batteries.

Replace the batteries as soon as they run out. The remote control uses two AA manganese or alkaline batteries.

1. Remove the battery cover as shown.

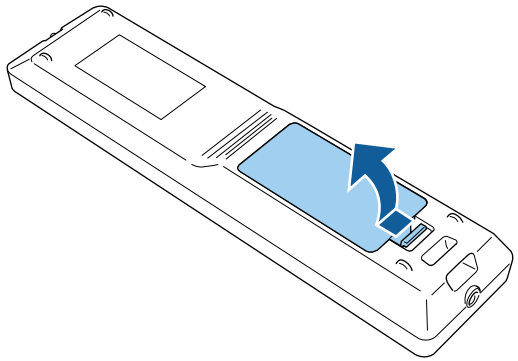

2. Remove the old batteries, if necessary.

Dispose of used batteries according to local regulations.

3. Insert the batteries.

⚠ Warning

Check the positions of the (+) and (–) marks inside the battery holder to ensure the batteries are inserted the correct way. If the batteries are not used correctly, they could explode or leak causing a fire, injury, or damage to the product.

4. Replace the battery cover and press it down until it clicks into place.

Remote Control Operation

The remote control lets you control the projector from almost anywhere in the room.

Make sure that you aim the remote control at the projector's receivers within the distance and angles listed here.

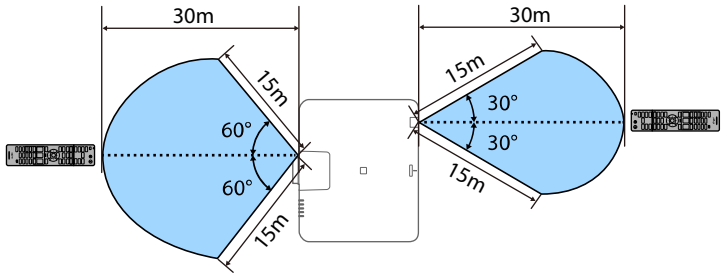

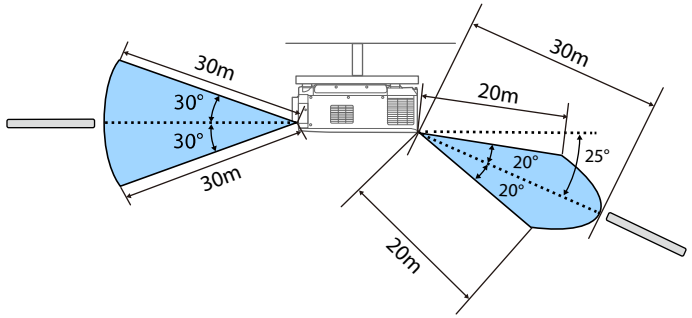

- Depending on your installation environment, the available distance and angles may be shortened.
- Avoid using the remote control in conditions with bright fluorescent lights or in direct sunlight, or the projector may not respond to commands. If you are not going to use the remote control for a long time, remove the batteries.
- When you use multiple projectors in the same room or when there are obstacles around the remote receiver, connect the remote control to the projector using a commercially available 3.5 mm stereo mini-jack audio cable. When the remote control is connected, the remote receiver on the projector is disabled.

Locking the Remote Control Buttons

You can lock some of the buttons on the remote control.

To lock the remote control buttons shown here, press and hold the [Home] button on the remote control for approximately 5 seconds.

To unlock the buttons, press and hold the [Home] button again for approximately 5 seconds.

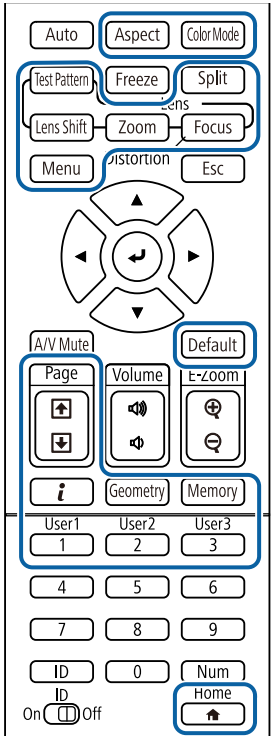

Projector Parts - External Camera

You can attach the optional external camera to the front of the projector or lens. See the external camera manual for the installation method.

You can acquire the manual for the external camera from the following Epson Web site.

https://epson.sn/?MKN=EB-PU2220B&PINF=vpoption

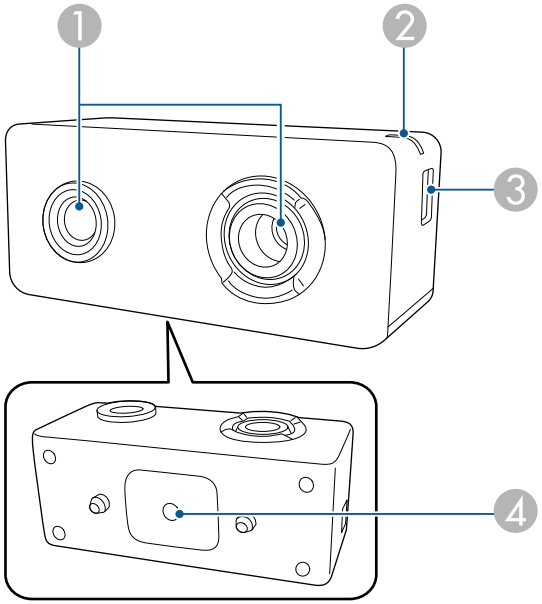

Name		Function
1	Camera lens	Takes photos. **Attention** Do not use or store the external camera in places where it will be exposed to strong light. Otherwise, burning or malfunction may occur.

Name		Function
2	Indicator light	Indicates the external camera's status. • Lit: standby • Flashing (0.25 seconds intervals): external camera is malfunctioning • Flashing (0.5 seconds intervals): external camera is operating • Flashing (1 second intervals): updating the firmware
3	micro USB-B port	Connects the supplied USB cable to the projector.
4	Screw holes (for installation)	Secures the mount for installing the external camera.

Related Links

• "External Camera Usage" p.138

Setting Up the Projector

Follow the instructions in these sections to set up your projector.

Related Links

- "Notes on Transporting" p.26
- "Precautions on Installation" p.27
- "Attaching and Removing a Lens" p.30
- "Attaching and Removing the Cable Cover" p.36
- "Operating the Projector Power" p.37
- "Wired Network Connection" p.40
- "Wireless Network Connection" p.42
- "Secure HTTP" p.49

There are many glass parts and precision components inside the projector. To prevent damage due to impacts when transporting, handle the projector as follows.

⚠ Caution

- The projector should not be carried by one person. At least two people are needed to unpack or carry the projector.
- When moving the projector, do not hold the lens replacement cover or lens unit. They may become disconnected and the projector may fall, which could cause an injury.

Attention

- Do not transport the projector with the lens installed. Doing so could damage the projector and the lens.
- If the projector does not have a lens, attach the cover that was on the lens mount when you purchased the projector.

You can install the projector or mount it to the ceiling at any horizontal or vertical angle. Note the following precautions when installing the projector.

⚠ Warning

This is a class A product. In a domestic environment this product may cause radio interference in which case the user may be required to take adequate measures.

⚠ Warning

- Do not use adhesives on the ceiling mount fixing points to prevent the screws from loosening, or use lubricants, oils, or similar substances on the projector; the projector case may crack causing it to fall from its ceiling mount. This could cause serious injury to anyone under the ceiling mount and could damage the projector.
- Failure to install the ceiling mount and projector may cause the projector to fall. Secure the mount to all of the projector's ceiling mount fixing points as specified in the projector's User's Guide. Also, secure the projector and the mount using wires that are strong enough to hold their weight. Be sure to use a mount specified by Epson that is compatible with this projector.
- Do not install the projector in a location subject to high levels of dust or humidity, or in a location subject to smoke or steam. Otherwise, it could cause a fire or electric shock to occur. The projector's case could also deteriorate and be damaged causing the projector to fall from the mount.

  Examples of environments that could cause the projector to fall due to case deterioration

  - Locations subject to excessive smoke or airborne oil particles, such as factories or kitchens
  - Locations containing volatile solvents or chemicals, such as factories or laboratories
  - Locations where the projector could be subjected to detergents or chemicals, such as factories or kitchens
  - Locations in which aroma oils are often used, such as relaxation rooms
  - Near devices that produce excessive smoke, airborne oil particles, or foam at events

Attention

Install the current breaker for 13 A to 20 A to the wiring in the building that supplies electricity to the projector. Do not connect other devices to the wiring where the current breaker is installed, and use the wiring only for the projector.

Attention

- Use M6 screws (up to a depth of 14 mm) to fix all of the projector's ceiling mount fixing points and the mounting hardware at four points.

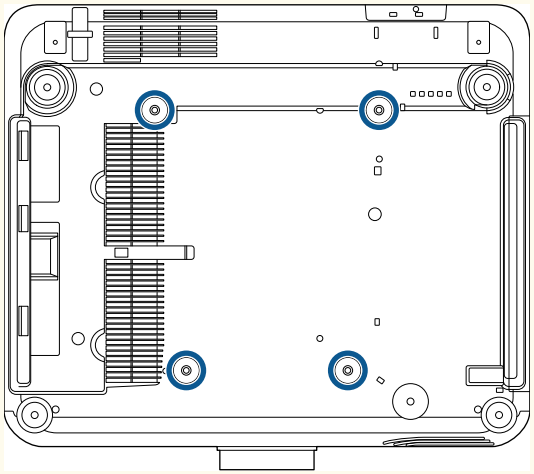

- Do not stack projectors directly on top of each other.

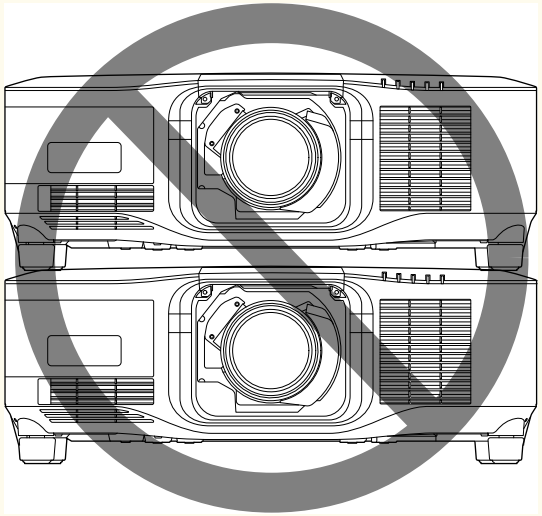

Installation space

Attention

- Be sure to leave the following amount of space around the projector so as not to block the air exhaust and intake vents.

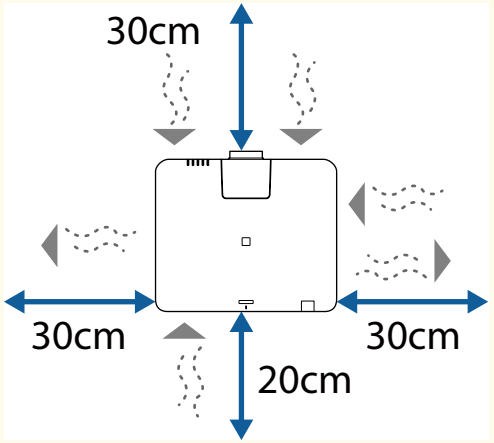

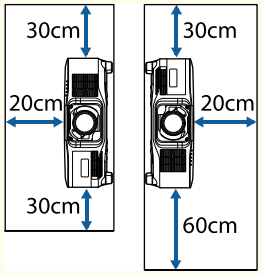

- Do not install the projector in a location that does not allow air to circulate, such as on a shelf or in a box. If you want to install the projector on a shelf or in an enclosure, contact Epson for help.
- If there is not enough space around the projector and the internal temperature of the projector increases, the brightness of the light source may decrease. Make sure hot air from the exhaust vent does not go into the air intake vent.

Installation space (When installing multiple projectors side by side)

Attention

- If you are installing multiple projectors next to each other, make sure hot air from the exhaust vent does not go into the air intake vent of another projector.

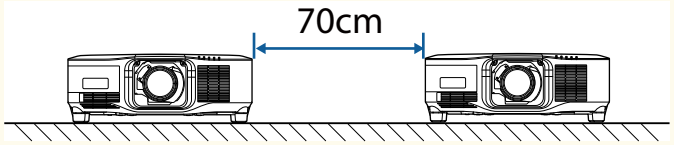

- If you use a partition, you can narrow the space between the projectors.

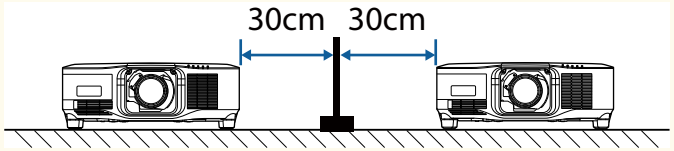

Follow the instructions in these sections to attach or remove a compatible lens.

The following lens are available.

- ELPLX02
- ELPLX02S
- ELPLX02W
- ELPLX02WS
- ELPLU03S
- ELPLU04
- ELPLU03
- ELPLW05
- ELPLW08
- ELPLW06
- ELPLM08
- ELPLM15
- ELPLM10
- ELPLM11
- ELPLM09
- ELPLL08

⚠ Warning

Make sure you turn off the projector and unplug the power cord before attaching or removing a lens. Otherwise, you may receive an electric shock.

Attention

- If dust or dirt gets inside the projector, projection quality deteriorates and it could cause a malfunction. Be sure to observe the following precautions when handling.
  - Make sure the front of the projector is not facing up when you attach or remove the lens.
  - Remove the lens only when necessary.
  - Store the projector with the lens installed.
- Avoid touching the lens with your bare hands to prevent fingerprints on or damage to the lens surface.

Related Links

- "Attaching a Lens" p.30
- "Removing a Lens" p.34

Attaching a Lens

You can attach a compatible lens to the projector.

For information on installing an ultra short-throw zoom lens, see the *User's Guide* supplied with the lens.

1 Turn off the projector and unplug the power cord.

2 Remove the lens replacement cover.

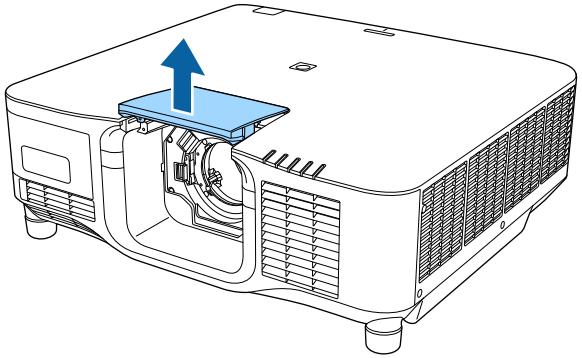

3 Pinch the lock lever and move it to the **Release** position.

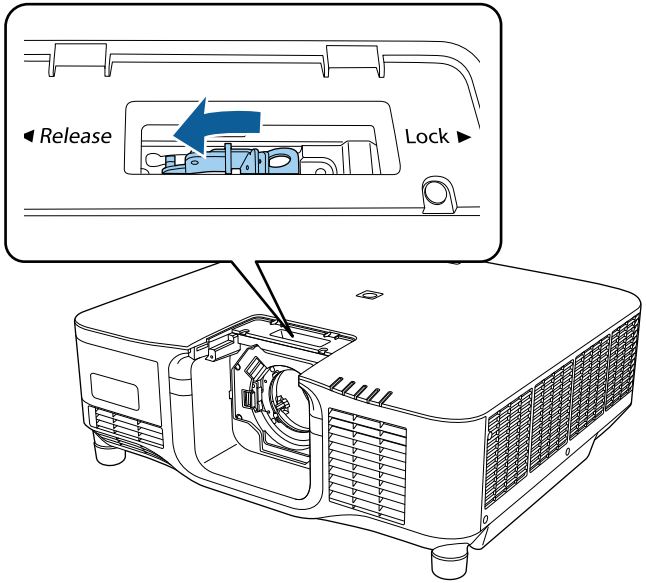

4 Insert the lens straight into the projector's lens socket with the white dot facing up.

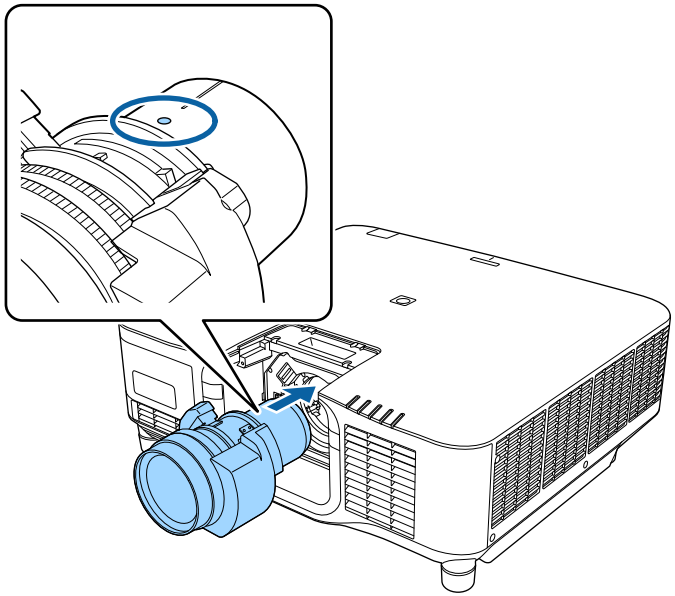

⚠ Caution

To avoid injury, be careful not to get your fingers caught between the projector and lens.

5 Hold the lens firmly, then pinch the lock lever and move it to the **Lock** position.

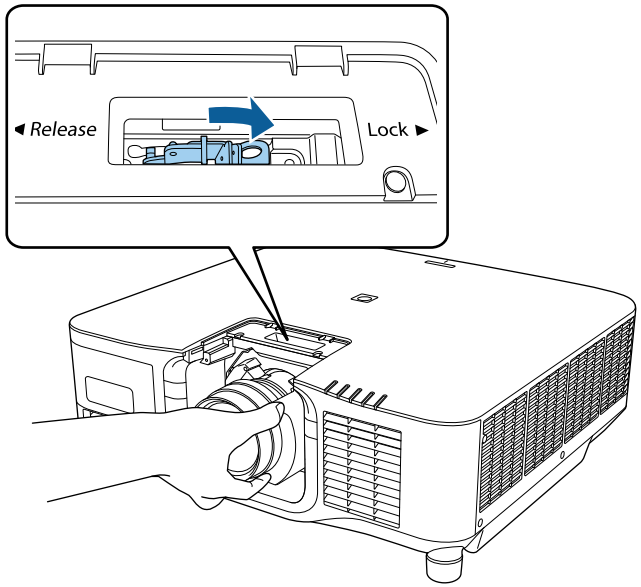

⚠ Warning

Make sure the lens is secured.

If the lens is not secured, it may fall off and could cause an injury when moving the projector.

6 If you want to secure the lens more firmly, tighten the screw next to the lock lever using a hexagonal wrench (2.5mm).

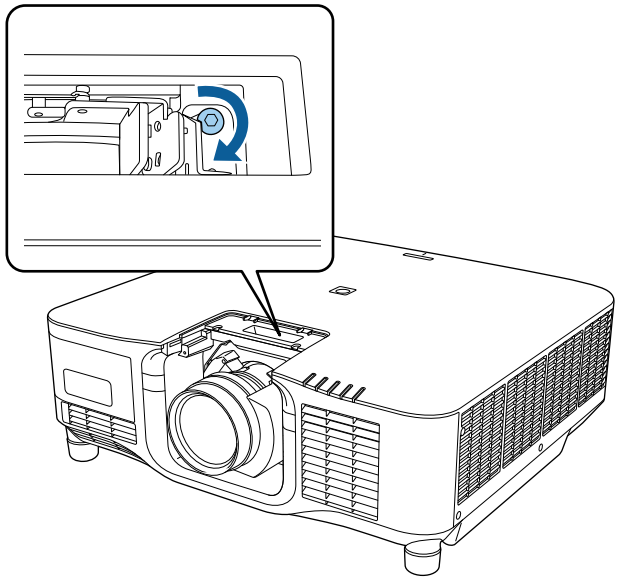

If you are using the ELPLX02S/ELPLX02WS, the lens is secured even without using the screw lock.

7 Replace the lens replacement cover.

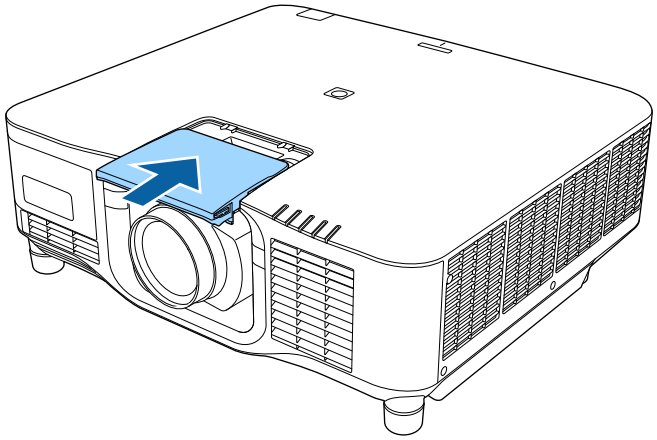

If projecting down, we recommend securing the lens replacement cover with commercially available screws (M3×12mm).

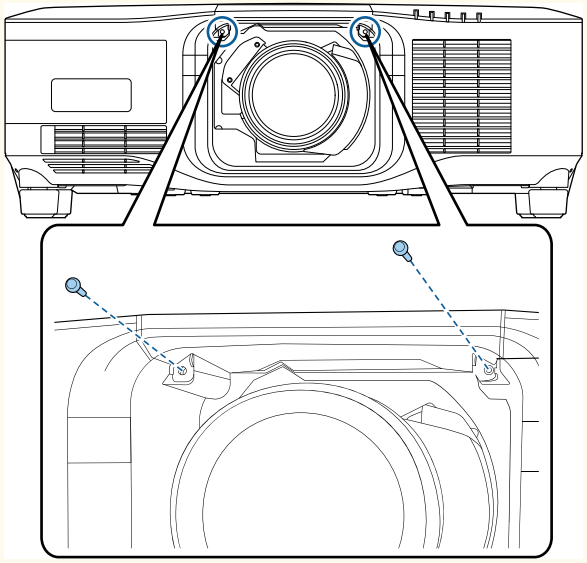

8 To perform lens calibration, turn on the projector.

9 When a message prompting you to start lens calibration is displayed, select **Yes**.

Lens calibration starts and helps the projector to correctly acquire the lens position and adjustment range. It takes up to 100 seconds. When calibration is finished, the lens returns to its original position.

The following lenses return to the standard position.

- ELPLX02S/02
- ELPLX02WS/02W

- If no message is displayed after turning on the projector, perform lens calibration manually using one of the following methods.
  - Hold down the [Default] button on the remote control for approximately 3 seconds.
  - Change the projector's menu:

    ☛ **Extended** > **Operation** > **Lens Calibration**
- If you do not calibrate the lens, the following functions may not operate correctly.
  - Focus
  - Distortion
  - Zoom
  - Lens Shift
  - Memory (Lens Position)

Attention

If the icon indicating that lens calibration has failed is displayed, remove the lens and then reinstall it. If the message continues to be displayed, stop using the projector, remove the power plug from the electrical outlet, and contact Epson for help.

If you are projecting from a table or other flat surface, the image may be tilted depending on your lens. Adjust the tilt of the image using the front and rear feet.

Removing a Lens

You can remove a lens to replace it with a different lens.

⚠ Caution

Wait at least 30 minutes to remove or replace the lens after turning off the projector. Touching the lens unit before it cools down may cause burns.

The projector uses a laser as the light source. As a safety measure, the light source turns off when the lens is removed. Attach the lens, and then press the [On] button to turn it back on.

1. Hold down the [Lens Shift] (remote control) or [Lens] (control panel) button for approximately 3 seconds to move the lens to the home position.
2. Turn off the projector and unplug the power cord.
3. Remove the lens replacement cover.

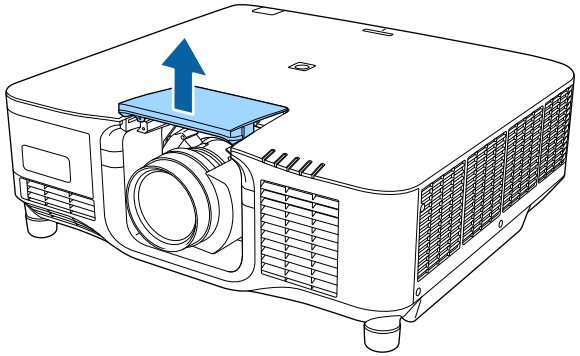

4. If necessary, loosen the screw next to the lock lever.

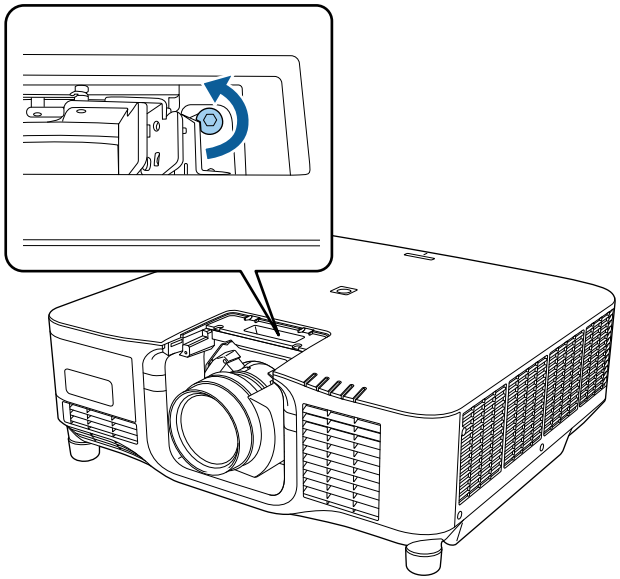

5 Hold the lens firmly as you pinch the lock lever and move it to the **Release** position.

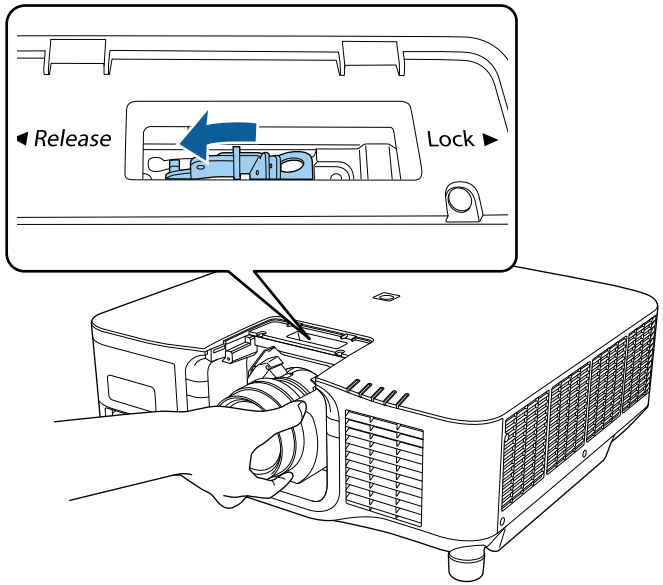

6 Gently pull the lens straight out of the projector.

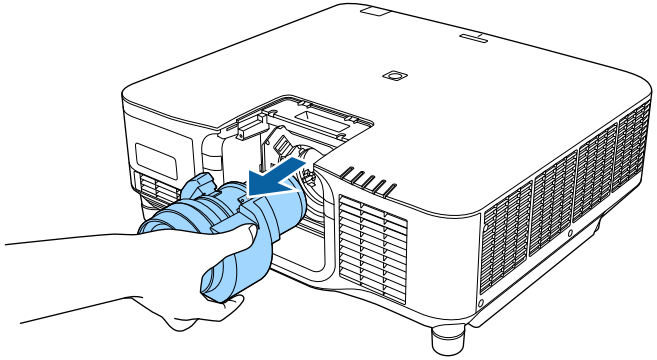

When suspending the projector from a ceiling, you can attach the cable cover that came with your projector to hide the attached cables from view.

1 Pass a commercially available cable tie through the cable holder and tie the cables together.

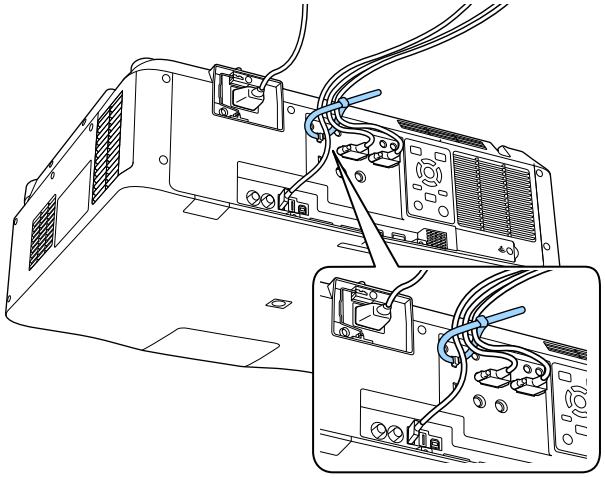

⚠ Caution

Do not bundle the power cord to the other cables. Otherwise, a fire may occur.

2 Place the cable cover on the projector as shown, guiding the cables through the notch on the base of the cable cover.

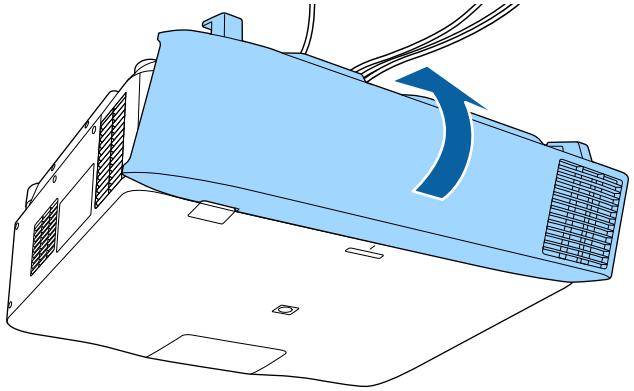

3 Tighten the cable cover screws.

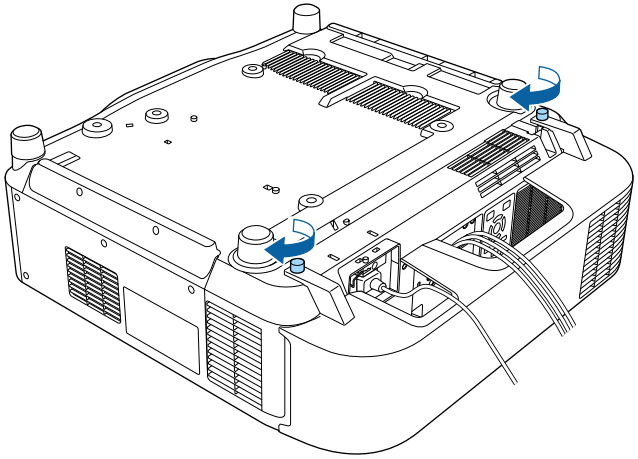

Follow the instructions in these sections to operate the projector power.

Related Links
- "Turning On the Projector" p.37
- "Turning Off the Projector" p.38

Turning On the Projector

Turn on the computer or video equipment you want to use after you turn on the projector.

1 Connect the power cord to the projector's power inlet and plug it into an electrical outlet.

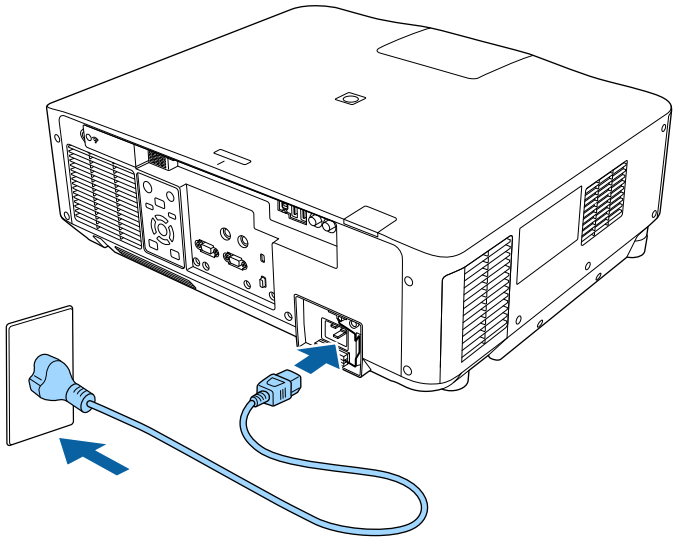

The projector's power indicator turns blue. This indicates that the projector is receiving power, but is not yet turned on (it is in standby mode).

You can use a 100 V power cord to operate the projector temporarily to determine the installation location. When projecting using the 100 V power cord, the brightness of the projected image is approximately 60% compared to when using a 200 V power cord. Use the 200 V power cord when adjusting the projected image or the lens. You cannot use the following functions with the 100 V power cord.

- Light Source Mode
- Estimated Remains
- Refresh Mode
- Light Source Calibration

Be sure to ground the power plug using a grounding wire or a 3-core power plug.

2 If necessary, lock the power cord to prevent it from falling off.

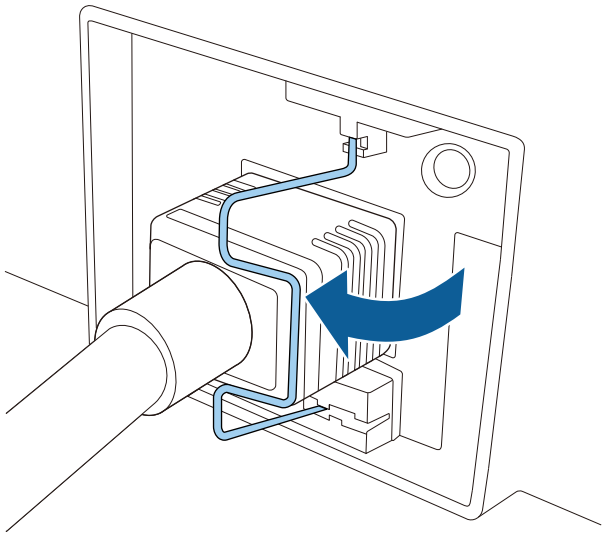

3 Press the [On] button on the control panel or remote control to turn on the projector.

The projector beeps and the status indicator flashes blue as the projector warms up. Once the projector is warmed up, the status indicator stops flashing and turns blue.

- When **Quick Startup** is enabled in the projector's **Extended** menu, the projector becomes ready for use in several seconds the next time you press the power button.

  ☛ **Extended** > **Operation** > **Quick Startup**

Try the following if you do not see a projected image.

- Turn on the connected computer or video device.
- Change the screen output from the computer when using a laptop computer.
- Insert a DVD or other video media, and press play (if necessary).
- Press the [Search] button on the control panel or remote control to detect the source.
- Press the button for the desired video source on the remote control.
- If the Home screen is displayed, select the source you want to project.

⚠ Warning

- Never look into the projector lens when the light source is on. This can damage your eyes and is especially dangerous for children.
- When turning on the projector at a distance using the remote control, make sure there is no one looking into the lens.
- During projection, do not block the light from the projector with a book or other objects. If the light from the projector is blocked, the area on which the light shines becomes hot which could cause it to melt, burn, or start a fire. Also, the lens may get hot due to the reflected light which could cause the projector to malfunction. To stop projection, use the A/V Mute or Shutter function, or turn off the projector.

- When the **Direct Power On** setting is set to **On** in the projector's **Extended** menu, the projector turns on as soon as you plug it in. Note that the projector also turns on automatically in cases such as recovery from a power outage.

  ☛ **Extended** > **Operation** > **Direct Power On**
- If you select a specific port as the **Auto Power On** setting in the projector's **Extended** menu, the projector turns on as soon as it detects a signal or cable connection from that port.

  ☛ **Extended** > **Operation** > **Auto Power On**

Related Links

- "Home Screen" p.52

Turning Off the Projector

Turn off the projector after use.

- Turn off this product when it is not in use to prolong the life of the projector. Light source life varies depending on the mode selected, environmental conditions, and usage. Brightness decreases over time.
- Light source calibration starts automatically if you turn off the projector and the following conditions are present:
  - The **Light Source Calibration** setting is set to **Run Periodically** in the projector's **Reset** menu
  - 100 hours have passed since the last light source calibration
  - You have used the projector continuously for more than 20 minutes
- Since the projector supports the direct shutdown feature, it can be turned off directly using the breaker.

1 Press the [Standby] button on the control panel or remote control.

The projector displays a shutdown confirmation screen.

2 Press the [Standby] button again. (To leave it on, press any other button.)
The projector beeps twice, the light source turns off, and the status indicator turns off.

3 To transport or store the projector, make sure the status indicator on the projector is off, and then unplug the power cord.

You can send images to your projector, as well as monitor and control your projector, over a network.

To perform these operations, you need to do the following first:

- Connect the projector to your network.
- Set up your projector and computer using the projector's **Network** menus.
- Download and install the following network software from the following Web site.

  epson.sn

  - Epson iProjection software sets up your computer for network projection. It also allows you to hold interactive meetings by projecting the user's computer screen over a network. See the *Epson iProjection Operation Guide (Windows/Mac)* for instructions.
  - Epson Projector Management software (Windows only) sets up your computer for monitoring and controlling projectors. See the *Epson Projector Management Operation Guide* for instructions.

If the **Web Control Password** has not been set, a screen prompting you to set a password is displayed when you save the network settings. Follow the on-screen instructions to set the password.

Related Links

- "Connecting to a Wired Network" p.40
- "Selecting Wired Network Settings" p.40

Connecting to a Wired Network

To connect the projector to a wired local area network (LAN), use a 100Base-TX or 10Base-T network cable. To ensure proper data transmission, use a Category 5 shielded cable or better.

1. Connect one end of the network cable to your network hub, switch, or router.
2. Connect the other end of the cable to the projector's LAN port.

Selecting Wired Network Settings

Before you can project from computers on your network, you need to select network settings on the projector.

Make sure you already connected the projector to your wired network using the LAN port.

1. Press the [Menu] button, select the **Network** menu, and press [Enter].
2. Select **Network Configuration** and press [Enter].
3. Select the **Basic** menu and press [Enter].
4. Select the basic options as necessary.
   - **Projector Name** lets you enter a name up to 16 alphanumeric characters long to identify the projector over the network.
   - **PJLink Password** lets you enter a password up to 32 alphanumeric characters long for using the PJLink protocol for projector control.
   - **Remote Password** lets you enter a password from 8 to 32 alphanumeric characters long to access the projector using the Basic Control. (User name is **EPSONREMOTE**. No password is set by default.)
   - **Web Control Password** lets you enter a password from 8 to 32 alphanumeric characters long to access the projector over the Web. (User name is **EPSONWEB**. No password is set by default.)
   - **Moderator Password** lets you enter a four-digit number password for accessing the projector as a moderator using Epson iProjection. (No password is set by default.)

- **Projector Keyword** lets you turn on a security password to prevent access to the projector by anyone not in the room with it. You must enter a displayed, randomized keyword from a computer using Epson iProjection to access the projector and share the current screen.
- **Display Keyword** lets you select whether to display a projector keyword on the projected image when accessing the projector using Epson iProjection.
- **Display LAN Info.** lets you set the display format for the projector's network information.



Use the displayed keyboard to enter numbers and characters. Press the arrow buttons on the remote control to highlight characters and press [Enter] to select them.

You can also enter numbers by pressing the number buttons while holding down the [Num] button on the remote control.

5 Select the **Wired LAN** menu and press [Enter].

6 Assign the IP settings for your network as necessary.

- If your network assigns addresses automatically, select **IP Settings** to set the **DHCP** setting to **On**.
- If you must set addresses manually, select **IP Settings** to set the **DHCP** setting to **Off**, and then enter the projector's **IP Address**, **Subnet Mask**, and **Gateway Address** as necessary.
- If you want to connect the projector to the network using IPv6, select **IPv6 Settings** to set the **IPv6** setting to **On**, and then set the **Auto Configuration** and **Use Temporary Address** settings as necessary.



To highlight the numbers you want from the displayed keyboard, press the arrow buttons on the remote control. To select a highlighted number, press [Enter].

7 To prevent the IP address from being displayed on the LAN standby screen and Home screen, set the **IP Address Display** setting to **Off**.

8 When you finish selecting settings, select **Complete** and follow the on-screen instructions to save your settings and exit the menus.



If no **Web Control Password** has been set, a screen prompting you to set a password is displayed before you can save the settings. Follow the on-screen instructions to set the password.

9 Press the [LAN] button on the remote control.

The wired network settings complete when you see the correct IP address on the LAN standby screen.

Related Links

- "Using the Displayed Keyboard" p.54

You can send images to your projector, as well as monitor and control your projector, over a network.

To perform these operations, you need to do the following first:

- Install the Epson 802.11a/b/g/n wireless LAN module onto the projector.
- Set up your projector and computer using the projector's **Network** menus.
- Download and install the following network software from the following Web site.

  epson.sn

  - Epson iProjection (Windows/Mac) software allows you to hold interactive meetings by projecting the user's computer screen over a network. See the *Epson iProjection Operation Guide (Windows/Mac)* for instructions.
  - Epson iProjection (iOS/Android) app allows you to project from iOS, Android, or Chromebook devices.

    You can download Epson iProjection for free from the App Store or Google Play. Any fees incurred when communicating with the App Store or Google Play are the responsibility of the customer.
  - Epson Projector Management software (Windows only) sets up your computer for monitoring and controlling projectors. See the *Epson Projector Management Operation Guide* for instructions.

If the **Web Control Password** has not been set, a screen prompting you to set a password is displayed when you save the network settings. Follow the on-screen instructions to set the password.

Related Links

- "Installing the Wireless LAN Module" p.42
- "Selecting Wireless Network Settings Manually" p.43
- "Selecting Wireless Network Settings in Windows" p.44
- "Selecting Wireless Network Settings in Mac" p.45
- "Setting Up Wireless Network Security" p.45
- "Using a QR Code to Connect a Mobile Device" p.47
- "Using a USB Key to Connect a Windows Computer" p.47

Installing the Wireless LAN Module

To use the projector over a wireless network, install the Epson 802.11a/b/g/n wireless LAN module. Do not install any other type of wireless LAN module.

Attention

Never remove the module while the WLAN (wireless LAN) indicator on the projector is blue or flashing, or while you are projecting wirelessly. This could damage the module or lose data.

1. Turn off the projector and unplug the power cord.
2. Loosen the screws and remove the wireless LAN module cover as shown.

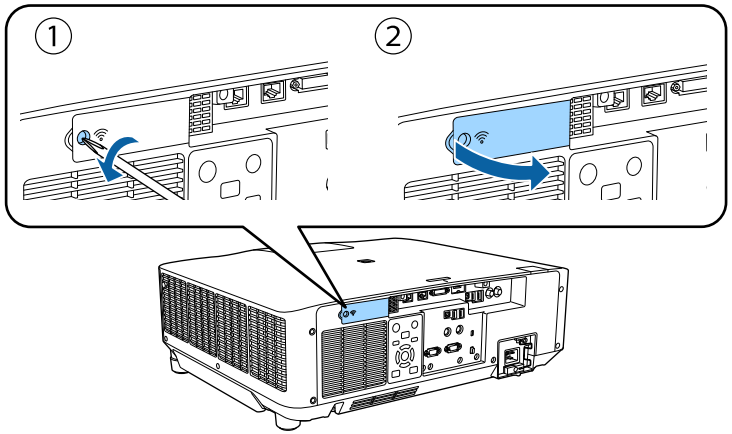

3 Connect the Wireless LAN module to the wireless LAN module slot.

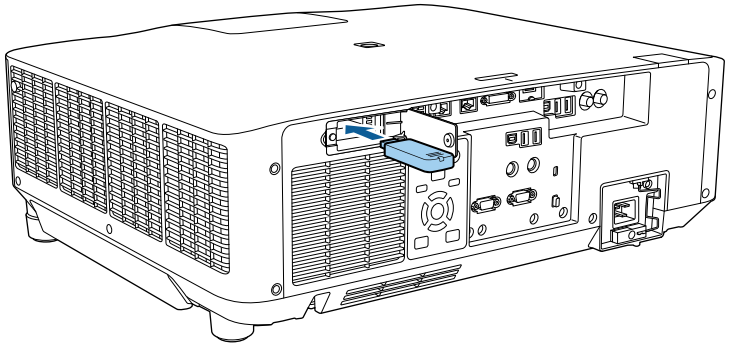

4 Replace the wireless LAN module cover as shown and tighten the screws.

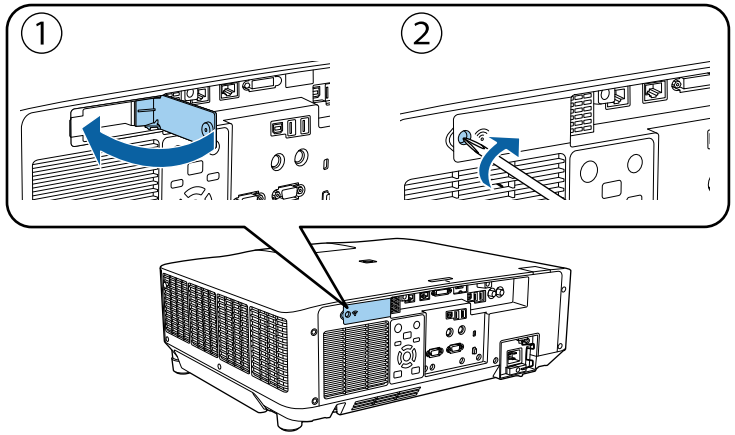

Selecting Wireless Network Settings Manually

Before you can project from your wireless network, you need to select network settings for the projector.

1 Press the [Menu] button, select the **Network** menu, and press [Enter].

2 Select **On** as the **Wireless LAN Power** setting.

3 Select **Network Configuration** and press [Enter].

4 Select the **Basic** menu and press [Enter].

5 Select the basic options as necessary.

- **Projector Name** lets you enter a name up to 16 alphanumeric characters long to identify the projector over the network.
- **PJLink Password** lets you enter a password up to 32 alphanumeric characters long for using the PJLink protocol for projector control.
- **Remote Password** lets you enter a password from 8 to 32 alphanumeric characters long to access the projector using the Basic Control. (User name is **EPSONREMOTE**. No password is set by default.)
- **Web Control Password** lets you enter a password from 8 to 32 alphanumeric characters long to access the projector over the Web. (User name is **EPSONWEB**. No password is set by default.)
- **Moderator Password** lets you enter a four-digit number password for accessing the projector as a moderator using Epson iProjection. (No password is set by default.)
- **Projector Keyword** lets you turn on a security password to prevent access to the projector by anyone not in the room with it. You must enter a displayed, randomized keyword from a computer using Epson iProjection to access the projector and share the current screen.
- **Display Keyword** lets you select whether to display a projector keyword on the projected image when accessing the projector using Epson iProjection.
- **Display LAN Info.** lets you set the display format for the projector's network information.

Use the displayed keyboard to enter numbers and characters. Press the arrow buttons on the remote control to highlight characters and press [Enter] to select them.

You can also enter numbers by pressing the number buttons while holding down the [Num] button on the remote control.

6 Select the **Wireless LAN** menu and press [Enter].

7 Select the **Connection Mode** setting.

- **Quick** lets you connect to multiple smartphones, tablets, or computers directly using wireless communication.
- **Advanced** lets you connect to smartphones, tablets, or computers over a wireless network access point.

8 If you selected the **Advanced** connection mode, select **Search Access Point** to select the access point you want to connect to.

If you need to assign the SSID manually, select **SSID** to enter the SSID.

9 For the **Advanced** connection mode, assign the IP settings for your network as necessary.

- If your network assigns addresses automatically, select **IP Settings** to set the **DHCP** setting to **On**.
- If you must set addresses manually, select **IP Settings** to set the **DHCP** setting to **Off**, and then enter the projector's **IP Address**, **Subnet Mask**, and **Gateway Address** as necessary.
- If you want to connect the projector to the network using IPv6, select **IPv6 Settings** to set the **IPv6** setting to **On**, and then set the **Auto Configuration** and **Use Temporary Address** settings as necessary.

10 To prevent the SSID or IP address from being displayed on the LAN standby screen and Home screen, set the **SSID Display** setting or the **IP Address Display** setting to **Off**.

11 When you finish selecting settings, select **Complete** and follow the on-screen instructions to save your settings and exit the menus.

If no **Web Control Password** has been set, a screen prompting you to set a password is displayed before you can save the settings. Follow the on-screen instructions to set the password.

12 Press the [LAN] button on the remote control.

The wireless network settings are complete when you see the correct IP address on the LAN standby screen.

When you have finished making wireless settings for your projector, you need to select the wireless network on your computer. Then start the network software to send images to your projector through a wireless network.

Related Links

- "Using the Displayed Keyboard" p.54

Selecting Wireless Network Settings in Windows

Before connecting to the projector, select the correct wireless network on your computer.

1 To access your wireless utility software, click the network icon on the Windows taskbar.

2 When connecting in Advanced connection mode, select the network name (SSID) of the network the projector is connecting to.

3 Click **Connect**.

Selecting Wireless Network Settings in Mac

Before connecting to the projector, select the correct wireless network in Mac.

1 Click the Wi-Fi icon on the menu bar at the top of the screen.

2 When connecting in Advanced connection mode, make sure Wi-Fi is turned on and select the network name (SSID) of the network the projector is connecting to.

Setting Up Wireless Network Security

You can set up security for your projector to use on a wireless network. Set up one of the following security options to match the settings used on your network:

- WPA2-PSK security *
- WPA3-PSK security **
- WPA2/WPA3-PSK security **
- WPA3-EAP security **
- WPA2/WPA3-EAP security **

* Available only for the Quick connection mode.

** Available only for the Advanced connection mode.

Contact your network administrator for guidance on entering the correct information.

1 If you want to set up the WPA3-EAP or WPA2/WPA3-EAP security, make sure your digital certificate file is compatible with projector registration and placed directly on the USB storage device.

2 Press the [Menu] button, select the **Network** menu, and press [Enter].

3 Select **Network Configuration** and press [Enter].

4 Select the **Wireless LAN** menu and press [Enter].

5 Select the **Security** setting and press [Enter].

6 Select the security settings to match your network settings.

7 Do one of the following according to the security you selected.

- **WPA2-PSK**, **WPA3-PSK**, or **WPA2/WPA3-PSK**: Select **Complete** and follow the on-screen instructions to save your settings and exit the menus.
- **WPA3-EAP**, **WPA2/WPA3-EAP**: Select **EAP Method** and press [Enter].

8 Select the protocol for authentication as the **EAP Type** setting.

9 To import your certificate, select the certificate type and press [Enter].

- **Client Certificate** for the **PEAP-TLS** or **EAP-TLS** type
- **CA certificate** for all EAP types

You can also register the digital certificates from your Web browser. However, be sure to register just once or the certificate may not install correctly.

10 Select **Register** and press [Enter].

11 Follow the on-screen instructions to connect a USB storage device to the projector's USB-A port.

12 Press [Enter] to display the certificate list.

13 Select the certificate to import using the displayed list.
A message is displayed prompting you to enter the password for the certificate.

14 Enter a password and press [Enter].
The certificate is imported and a completion message appears.

15 Select your EAP settings as necessary.

- **User name** lets you enter a user name using up to 64 alphanumeric characters. To enter more than 32 characters, use your Web browser. When importing a client certificate, the name the certificate was issued to is automatically set.
- **Password** lets you enter a password using up to 64 alphanumeric characters for authentication when using the **PEAP**, **EAP-FAST**, or **LEAP** type. To enter more than 32 characters, use your Web browser.
- **Verify Server Cert.** lets you select whether or not to verify the server certificate when a CA certificate has been set.
- **RADIUS Serv.Name** lets you enter the server name to be verified.

16 When you have finished making settings, select **Complete** and follow the on-screen instructions to save your settings and exit the menus.

Related Links

- "Supported Client and CA Certificates" p.46

Supported Client and CA Certificates

You can register these types of digital certificates.

Client Certificate (PEAP-TLS/EAP-TLS)

Specification	Description
Format	PKCS#12
Extension	PFX, P12
Encryption	RSA
Hashes	MD5/SHA-1/SHA-256/SHA-384/SHA-512
Key length	512/1024/2048/4096 bit
Password *	Up to 64 alphanumeric characters; required

CA Certificate (PEAP/PEAP-TLS/EAP-TLS/EAP-FAST)

Specification	Description
Format	X509v3
Extension	DER/CER/PEM
Encryption	RSA
Hashes	MD5/SHA-1/SHA-256/SHA-384/SHA-512
Key length	512/1024/2048/4096 bit
Encoding	BASE64/Binary

* You need to use your Web browser to enter more than 32 characters.

Using a QR Code to Connect a Mobile Device

After selecting the wireless network settings for your projector, you can display a QR code on the screen and use it to connect a mobile device using the Epson iProjection (iOS/Android) app.

- Make sure you have installed the latest version of Epson iProjection on your device.
- You can download Epson iProjection for free from the App Store or Google Play. Any fees incurred when communicating with the App Store or Google Play are the responsibility of the customer.
- When using Epson iProjection in Quick connection mode, we recommend making security settings.

1. Press the [LAN] button on the remote control.
   The QR code is displayed on the projected surface.

   - If you do not see the QR code, set the **Display LAN Info.** setting to **Text & QR Code** in the projector's **Network** menu.
     ☛ **Network** > **Network Configuration** > **Basic** > **Display LAN Info.**
   - To hide the QR code, press [Esc].
   - When the QR code is hidden, press [Enter] to display the code.

2. Start Epson iProjection on your mobile device.

3. Read the projected QR code using Epson iProjection to connect it to the projector.

   To correctly read the QR code, make sure you face the screen squarely and closely enough so that the projected code fits into the guide of the mobile device's QR code reader. If you are too far from the screen, the code may not be read.

When a connection is established, select **Contents** menu from ☰, and then select the file you want to project.

Using a USB Key to Connect a Windows Computer

You can set up your USB flash drive as a USB key to quickly connect the projector to a wireless LAN supported Windows computer. After creating the USB key, you can quickly project images from the network projector.

1. Set up the USB key using **USB Key Setup Tool** of the Epson iProjection (Windows) software.

   See the *Epson iProjection Operation Guide (Windows/Mac)* for instructions.

2. Make sure the wireless LAN module is installed into your projector.

3. Turn on the projector.

4. Press the [LAN] button on the remote control.
   The LAN standby screen is displayed. Verify that an SSID and IP address are displayed.

5 Remove the wireless LAN module from the projector's USB-A port (if installed) and insert the USB key into the same port.

You see a projected message that the network information update is complete.

6 Remove the USB key.

If your projector needs the wireless LAN module, reinsert the wireless LAN module into the projector.

7 Connect the USB key to a USB port on your computer.

8 Follow the on-screen instructions to install the necessary application.

- If the Windows Firewall message is displayed, click **Yes** to disable the firewall.
- You need administrator authority to install the software.
- If it is not installed automatically, double-click **MPPLaunch.exe** in the USB key.

After a few minutes, your computer image is displayed by the projector.

9 When you have finished projecting wirelessly, select the **Safely Remove Hardware** option in the Windows taskbar, and then remove the USB key from your computer.

You may need to restart your computer to reactivate your wireless LAN connection.

You can use the HTTPS protocol to increase security between the projector and a Web browser communicating with it. To do this, you create a server certificate, install it on the projector, and turn on the **Secure HTTP** setting in the projector menus to verify the reliability of the Web browser.

☛ **Network** > **Network Configuration** > **Others** > **Secure HTTP**

Even if you do not install a server certificate, the projector automatically creates a self-signed certificate and allows communication. However, because the self-signed certificate cannot verify reliability from a Web browser, you see a warning about the server's reliability when you access the projector from a Web browser. This warning does not prevent communication.

Related Links
- "Importing a Web Server Certificate Using the Menus" p.49

Importing a Web Server Certificate Using the Menus

You can create your Web server certificate and import it using the projector menus and an external storage device.

- You can use a USB flash drive as an external storage device for this model.
- You can also register the digital certificates from your Web browser. However, be sure to register just once or the certificate may not install correctly.

1. Make sure your digital certificate file is compatible with projector registration and directly placed on the USB storage device.
2. Press the [Menu] button, select the **Network** menu, and press [Enter].
3. Select **Network Configuration** and press [Enter].
4. Select the **Others** menu and press [Enter].
5. Set the **Secure HTTP** setting to **On**.
6. Select **Web Server Cert.** and press [Enter].
7. Select **Register** and press [Enter].
8. Follow the on-screen instructions to connect a USB storage device to the projector's USB-A port.
9. Press [Enter] to display the certificate list.
10. Select the certificate to import using the displayed list.
    A message is displayed prompting you to enter the password for the certificate.
11. Enter a password and press [Enter].
    The certificate is imported and a completion message appears.

Related Links
- "Supported Web Server Certificates" p.49

Supported Web Server Certificates

You can register these types of digital certificates.

Web Server Certificate (Secure HTTP)

Specification	Description
Format	PKCS#12
Extension	PFX, P12

Specification	Description
Encryption	RSA
Hashes	MD5/SHA-1/SHA-256/SHA-384/SHA-512
Key length	512/1024/2048/4096 bit
Common name	Network host name
Organization	Optional
Password *	Up to 64 alphanumeric characters; required

* You need to use your Web browser to enter more than 32 characters.

Adjusting the Menu Settings

Follow the instructions in these sections to access the projector menu system and change projector settings.

Related Links

- "Home Screen" p.52
- "Using the Projector's Menus" p.53
- "Using the Displayed Keyboard" p.54
- "Using Basic Projector Features" p.55
- "Copying Menu Settings Between Projectors (Batch Setup)" p.70

The Home screen feature allows you to easily select an image source and access useful functions.

You can display the Home screen by pressing the [Home] button on the remote control. If you want to display the Home screen when you turn on the projector and no signal is being input, set **Home Screen Auto Disp.** to **On**.

☛ **Extended** > **Home Screen** > **Home Screen Auto Disp.**

Press the arrow buttons on the remote control to select a menu item, and then press [Enter].

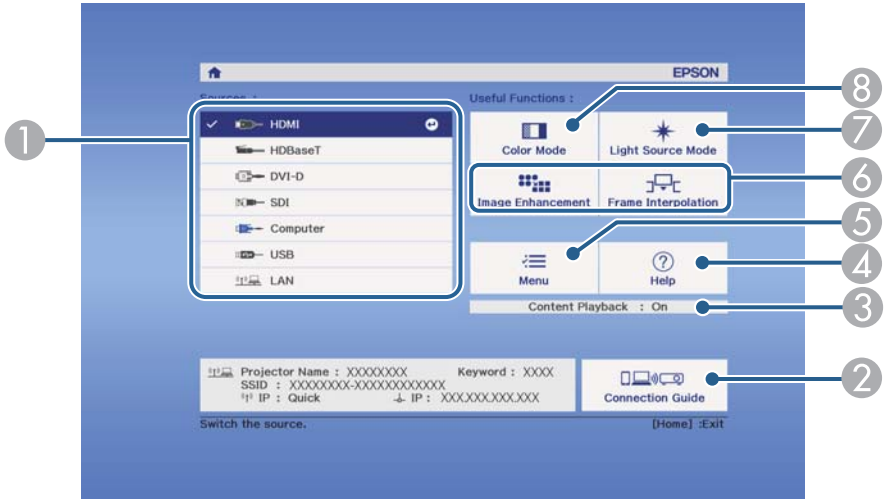

1. Selects the source you want to project.
2. Displays the Connection Guide. You can select the wireless connection methods according to the devices you are using, such as smartphones or computers.
3. Indicates the projector is in Content Playback mode.
4. Displays the Help screen.
5. Displays the projector's menu.
6. Performs menu options assigned to **Home Screen** in the projector's **Extended** menu.
7. Selects the brightness for the light source.
8. Changes the projector's color mode.

After 10 minutes of inactivity, the Home screen disappears and you are returned to the screen that you were on before (the current input source screen or no signal message).

You can use the projector's menus to adjust the settings that control how your projector works. The projector displays the menus on the screen.

1. Press the [Menu] button on the control panel or remote control.
   You see the menu screen displaying the **Image** menu settings.

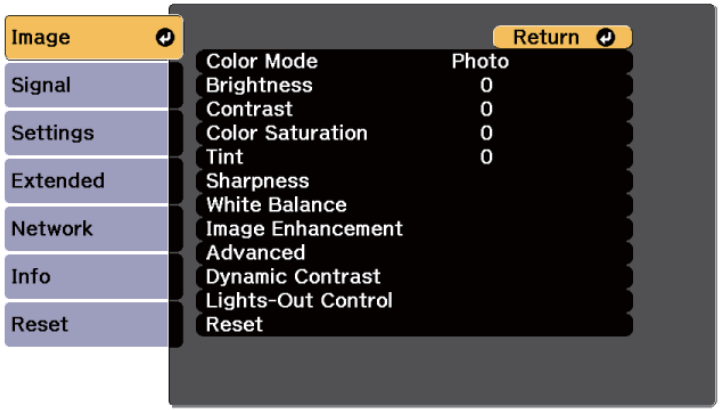

2. Press the up or down arrow buttons to move through the menus listed on the left. The settings for each menu are displayed on the right.

> The available settings depend on the current input source.

3. To change settings in the displayed menu, press [Enter].
4. Press the up or down arrow button to move through the settings.
5. Change the settings using the buttons listed on the bottom of the menu screens.
6. To return all the menu settings to their default values, select **Reset**.
7. When you finish changing settings on a menu, press [Esc].
8. Press [Menu] or [Esc] to exit the menus.

You can use the displayed keyboard to enter numbers and characters.

1 Use the arrow buttons on the control panel or remote control to highlight the number or character you want to enter and press the [Enter] button.

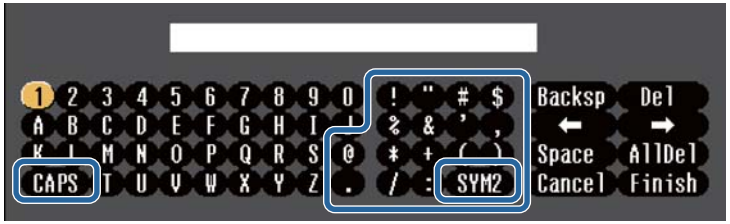

Each time you select the CAPS key, the characters change between upper case and lower case. Each time you select the SYM1/2 key, the symbols enclosed by the frame change.

2 After entering the text, select Finish on the keyboard to confirm your entries. Select Cancel to cancel entering text.

You can select projector settings and control projection over a network using a Web browser from your computer.

Some symbols cannot be entered using the displayed keyboard. Use your Web browser to enter the text.

Related Links

- "Available Text Using the Displayed Keyboard" p.54

Available Text Using the Displayed Keyboard

You can enter the following text when using the displayed keyboard.

Text type	Details
Numbers	0123456789
Alphabet	ABCDEFGHIJKLMNOPQRSTUVWXYZ abcdefghijklmnopqrstuvwxyz
Symbols	! " # $ % & ' ( ) * + , - . / : ; < = > ? @ [\ ] ^ _ ` { | } ~

Follow the instructions in these sections to use your projector's basic features.

Related Links
- "Setting Up the Projector" p.55
- "Projecting Images" p.57
- "Adjusting the Image Position and Shape" p.60
- "Adjusting the Image Quality" p.62
- "Using Multiple Projectors" p.64
- "Maintaining the Projector Quality" p.66
- "Managing the Projector's Settings" p.66

Setting Up the Projector

This section provides instructions on setting up your projector.

Related Links
- "Messages" p.55
- "Standby Confirmation" p.55
- "Sleep Mode" p.55
- "Beep" p.55
- "Indicators" p.56
- "Date & Time" p.56
- "Language" p.56
- "On-Screen Display" p.56
- "Energy Saving Mode" p.56
- "Remote Control Type" p.57

Messages

You can display or hide messages such as the input source name, color mode name, aspect ratio, no signal message, or high temperature warning on the projected image.

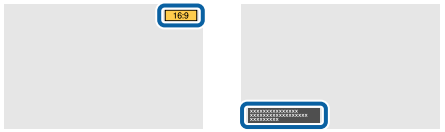

Execution Method

☛ **Extended** > **Display** > **Messages**

Standby Confirmation

When set to **Off**, you can turn off the projector simply by pressing the power button once.

Execution Method

☛ **Extended** > **Display** > **Standby Confirmation**

Sleep Mode

When set to **On**, the projector automatically turns off after an interval of inactivity.

You can also set the interval in the **Sleep Mode Timer** setting.

Execution Method

☛ **Extended** > **Operation** > **Sleep Mode**

☛ **Extended** > **Operation** > **Sleep Mode Timer**

Beep

When set to **Off**, you can turn off the confirmation buzzer beeps to notify you that the power turns on or off, or cooling down is finished.

Execution Method

☛ **Extended** > **Operation** > **Advanced** > **Beep**

Indicators

When set to **Off**, you can turn off the indicator lights on the projector.

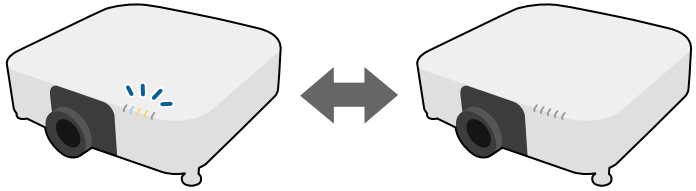

Execution Method

☛ **Extended** > **Operation** > **Advanced** > **Indicators**

Date & Time

You can adjust the projector's system time and date settings.

Execution Method

☛ **Extended** > **Operation** > **Date & Time**

Language

You can select the language for projector menu and message displays.

Execution Method

☛ **Extended** > **Language**

On-Screen Display

You can display or hide the menus or messages on the projected image. Make sure you assign **On-Screen Display** to any [User] button on the remote control in the **Settings** menu.

☛ **Settings** > **User Button**

Execution Method

Press the [User] button on the remote control to which **On-Screen Display** is assigned.

- Menus and messages are displayed or hidden each time you press the button.
- If **On-Screen Display** is enabled, you cannot operate the projector's menu (except to switch the color mode and input source).

Energy Saving Mode

When set to **On**, you can reduce the power consumption by automatically adjusting the light source brightness. The light source brightness is gradually adjusted over a period of 60 minutes and it does not ruin the image appearance.

When you use the **Multi-Projection** or **Constant Brightness** features, set to **Off** to correct differences in the brightness between projectors.

Execution Method

☛ **Settings** > **Brightness Settings** > **Energy Saving Mode**

This function is disabled in the following cases:

- When **Edge Blending** is set to **Blending/Black Level** or **Black Level**.
  ☛ **Extended** > **Multi-Projection** > **Edge Blending**
- When **Color Mode** is set to **Multi-Projection**.
  ☛ **Image** > **Color Mode**
- When **Light Source Mode** is set to **Custom**.
  ☛ **Settings** > **Brightness Settings** > **Light Source Mode**

Remote Control Type

If you want to adjust the zoom/focus/distortion of the projected image using the Epson remote control as shown below, select **Advanced** as the **Remote Control Type** setting.

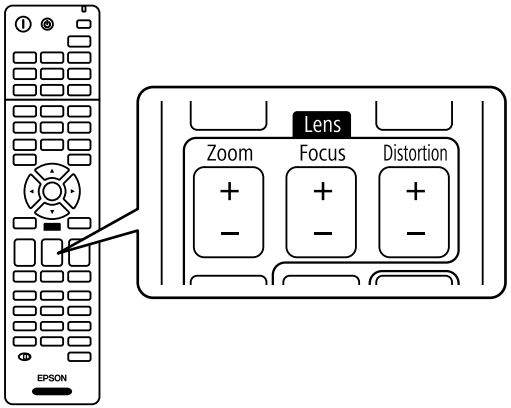

Execution Method

☛ **Extended** > **Operation** > **Advanced** > **Remote Control Type**

Projecting Images

This section provides instructions to project images.

Related Links

- "Source Search" p.57
- "A/V Mute" p.57
- "Shutter" p.58
- "Freeze" p.58
- "Split Screen" p.58
- "Volume" p.58
- "Aspect" p.59
- "Screen Type" p.59
- "Projection" p.59
- "Test Pattern" p.59
- "Content Playback" p.60
- "Display Background" p.60
- "Startup Screen" p.60

Source Search

When multiple image sources are connected to the projector, such as a computer and DVD player, you can switch from one image source to the other.

Execution Method

- Press the [Search] (remote control) or [Source Search] (control panel) button on the control panel or remote control until you see the image from the source you want.
- Press the button for the source you want on the remote control. If there is more than one port for that source, press the button again to cycle through the sources.
- Press the [Home] button on the remote control. Then select the source you want to use from the screen displayed.

A/V Mute

You can temporarily turn off the projected image and sound. Any sound or video action continues to run, however, so you cannot resume projection at the point that you stopped it (EB-PU2120W).

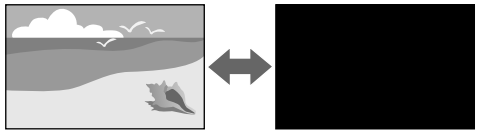

Execution Method

Press the [A/V Mute] button on the control panel or remote control. To turn the image and sound back on, press [A/V Mute] again.

- You can add a fade out or fade in effect when turning the video on or off.
- You can limit the way the A/V Mute function is released.

☛ **Extended** > **Operation** > **A/V Mute Settings**

Shutter

You can temporarily hide the projected image and sound by closing the mechanical shutter. Any sound or video action continues to run, however, so you cannot resume projection at the point that you closed the shutter (EB-PU2220B).

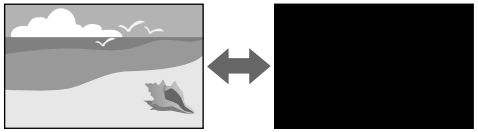

Execution Method

Press the [A/V Mute] button on the control panel or remote control. To turn the image and sound back on, press [A/V Mute] again.

- You can add a fade out or fade in effect when turning the video on or off.
- You can limit the way the shutter function is released.

☛ **Extended** > **Operation** > **Shutter Settings**

Freeze

You can temporarily stop the action in a video or computer presentation and keep the current image on the screen. Any sound or video action continues to run, however, so you cannot resume projection at the point that you stopped it.

Execution Method

Press the [Freeze] button on the remote control. To restart the video action in progress, press [Freeze] again.

Split Screen

You can use the **Split Screen** feature to simultaneously project two images from different image sources.

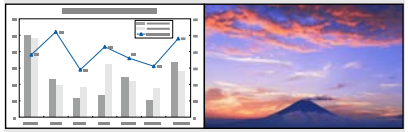

Execution Method

- Press the [Split] buttons on the remote control
- Change the projector's menu:

  ☛ **Settings** > **Split Screen**

Volume

You can adjust the volume of the audio from the Audio Out port.

Execution Method

- Press the [Volume] buttons on the remote control.
- Change the projector's menu:
  ☛ **Settings** > **Volume**

Aspect

The projector can display images in different width-to-height ratios called aspect ratios. Normally, the input signal from your video source determines the image's aspect ratio. However, you can change the aspect ratio for certain images to fit your screen.



Execution Method

- Press the [Aspect] button on the remote control.
- Change the projector's menu:
  ☛ **Signal** > **Aspect**

If you always want to use a particular aspect ratio for a certain video input source, you can select it using the projector's **Signal** menu.

Screen Type

You can use the **Screen Type** setting to match the aspect ratio of the displayed image to the screen you are using.

Execution Method

☛ **Extended** > **Display** > **Screen** > **Screen Type**

- Adjust the aspect ratio for the projected image, if necessary.
- When the **Screen Type** setting changes, the **EDID** settings are automatically adjusted.

Projection

You can change the projection mode to flip the image over top-to-bottom and/or left-to-right using the projector menus.

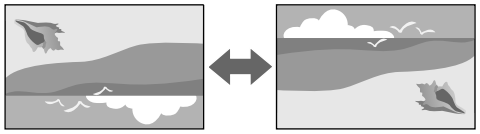

Execution Method

☛ **Extended** > **Projection**

You can change the projection mode to flip the image over top-to-bottom by holding down the [A/V Mute] button on the remote control for approximately 5 seconds.

Test Pattern

You can display a test pattern to adjust the projected image without connecting a computer or video device.

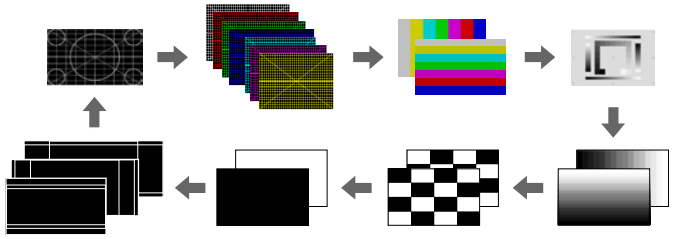

Execution Method

- Press the [Test Pattern] button on the control panel or remote control.
- Change the projector's menu:
  ☛ **Settings** > **Test Pattern**

Content Playback

Your projector's Content Playback feature allows you to project your digital signage content. You can also add color and shape effects to your projected image.



You can use the following software to create content that can be played in Content Playback mode.

- Epson Projector Content Manager
- Epson Web Control
- Epson Creative Projection

Execution Method

☛ **Settings** > **Content Playback**

Display Background

You can select the screen background when no image signal is available.

Execution Method

☛ **Extended** > **Display** > **Display Background**

Startup Screen

When set to **On**, a logo is displayed when the projector starts up.

Execution Method

☛ **Extended** > **Display** > **Startup Screen**

Adjusting the Image Position and Shape

This section provides instructions to adjust the image position and shape without moving the projector.

Related Links

- "Lens Shift" p.60
- "Zoom" p.61
- "H/V-Keystone" p.61
- "Quick Corner" p.61
- "Curved Surface" p.62
- "Corner Wall" p.62
- "Point Correction" p.62

Lens Shift

If you cannot install the projector directly in front of the screen, you can adjust the position of the projected image using the lens shift feature.

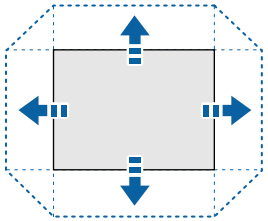

You can check the available lens shift range in the projector's *Specifications*.

Execution Method

- Press the [Lens Shift] button on the remote control.
- Press the [Lens] button on the control panel until the lens shift adjustment screen is displayed.

⚠ Caution

When shifting the lens, do not put your hands near the lens unit. Your fingers may get caught between the lens unit and the projector, and cause an injury.

- Wait 20 minutes after turning on the projector before setting the lens shift for maximum accuracy.
- When adjusting the image height, position the image lower than where you want it to be and then move it up. This will help prevent the image from moving down after adjustment.
- The image is clearest when the lens is at the home position. To move the lens to the home position, hold the [Lens Shift] button on the remote control or the [Lens] button on the control panel for more than 3 seconds.

Zoom

You can resize the image.

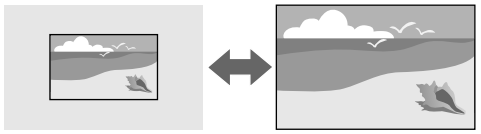

Execution Method

- Press the [Zoom] button on the remote control.
- Press the [Lens] button on the control panel until the zoom adjustment screen is displayed.
- Use the arrow buttons on the control panel or remote control to adjust the image size.

H/V-Keystone

You can correct distortion in the horizontal and vertical directions independently.



Execution Method

☛ **Settings** > **Geometry Correction** > **H/V-Keystone**

Quick Corner

You can correct each of the four corners of the projected image independently.

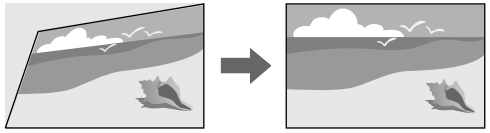

Execution Method

☛ **Settings** > **Geometry Correction** > **Quick Corner**

Curved Surface

You can correct the corners and sides of an image projected on a curved surface with the same radius.

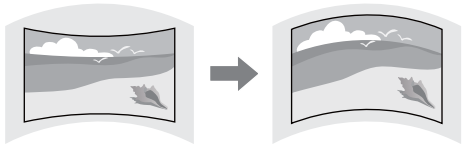

Execution Method

☛ **Settings** > **Geometry Correction** > **Curved Surface**

Corner Wall

You can correct the corners and sides of an image projected on a curved surface with right angles.

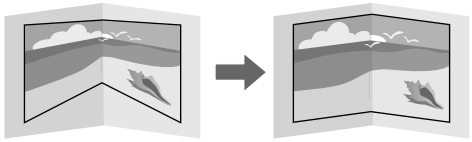

Execution Method

☛ **Settings** > **Geometry Correction** > **Corner Wall**

Point Correction

This feature divides the projected image into a grid and corrects the distortion in 0.5 pixel increments by moving the selected point of intersection from side to side and up and down.

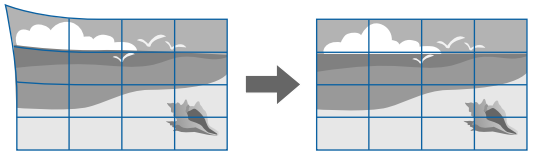

Execution Method

☛ **Settings** > **Geometry Correction** > **Point Correction**

Adjusting the Image Quality

This section provides instructions to adjust the quality of your image.

Related Links

- "Focus/Distortion " p.62
- "Color Mode" p.63
- "Image Enhancement" p.63
- "Gamma" p.63
- "RGBCMY" p.63
- "Brightness Settings" p.64

Focus/Distortion

You can correct the focus and the image distortion.

If you installed an optional short throw lens, correct the focus at the center of your screen first, and then correct any distortion in the surrounding area. When you focus on the center of your screen, the surrounding area may be distorted and out of focus.

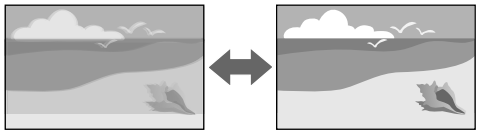

Execution Method

- Press the [Focus] button on the remote control until the focus adjustment screen or the distortion adjustment screen is displayed..
- Press the [Lens] button on the control panel until the focus adjustment screen or the distortion adjustment screen is displayed.
- Use the arrow buttons on the control panel or remote control to correct the focus or the distortion.

Color Mode

The projector offers different color modes to provide optimum brightness, contrast, and color for a variety of viewing environments and image types. You can select the mode designed to match your image and environment, or experiment with the available modes.

Execution Method

- Press the [Color Mode] button on the remote control.
- Change the projector's menu:

  ☛ **Image** > **Color Mode**

Image Enhancement

You can adjust the resolution of the image to reproduce a clear image with an emphatic texture and material feel.

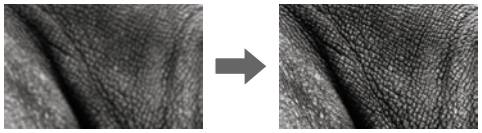

Execution Method

☛ **Image** > **Image Enhancement**

Gamma

You can adjust the halftone brightness by selecting one of the gamma correction values, or referring to a gamma graph.

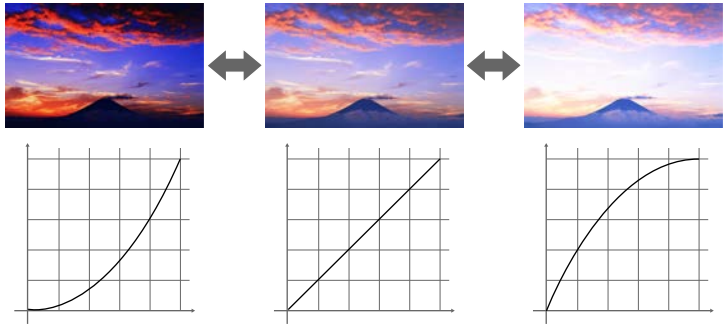

Execution Method

☛ **Image** > **Advanced** > **Gamma**

RGBCMY

You can adjust the Hue, Saturation, and Brightness of each color R (red), G (green), B (blue), C (cyan), M (magenta), Y (yellow) individually.



Execution Method

☛ **Image** > **Advanced** > **RGBCMY**

Brightness Settings

You can select the brightness for the light source.



Execution Method

☛ **Settings** > **Brightness Settings**

Using Multiple Projectors

You can combine the projected images from two or more projectors to create one unified image area.

Related Links

- "Tiling" p.64
- "Edge Blending" p.64
- "Black Level" p.65
- "Scale" p.65
- "Color Matching" p.65
- "Simple Stacking" p.65

Tiling

You can assign a projection position to each projector.

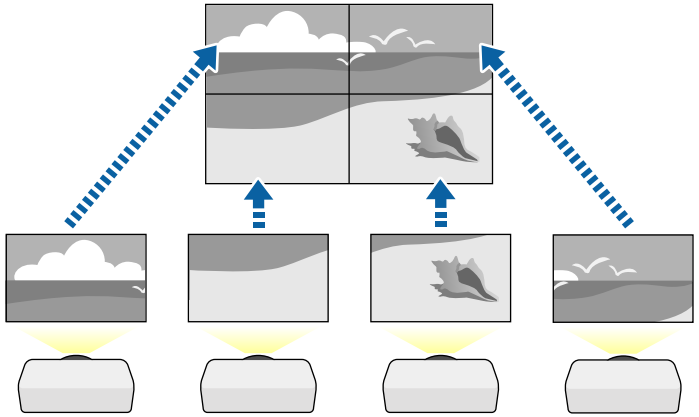

Execution Method

☛ **Extended** > **Multi-Projection** > **Tiling**

Edge Blending

You can use the **Edge Blending** feature to create a seamless image from multiple projectors.

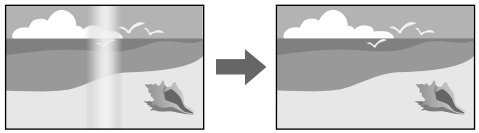

Execution Method

☛ **Extended** > **Multi-Projection** > **Edge Blending**

Black Level

You can adjust the brightness and color tone of the areas where the images do not overlap to create a seamless image.

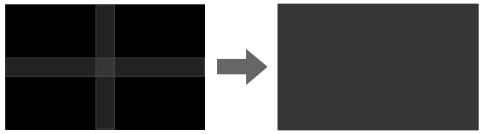

Execution Method

☛ **Extended** > **Multi-Projection** > **Black Level**

Scale

You can use the **Scale** feature to crop and combine them into one unified image area.

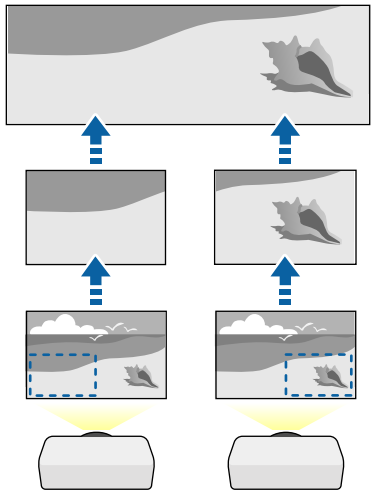

Execution Method

☛ **Extended** > **Multi-Projection** > **Scale**

Color Matching

You can match the display quality of multiple projectors that will project next to each other.

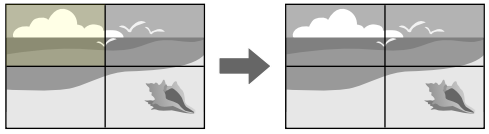

Execution Method

☛ **Extended** > **Multi-Projection** > **Screen Matching** > **Color Matching**

Simple Stacking

You can easily and quickly create a bright projected image by overlapping the images of two projectors.

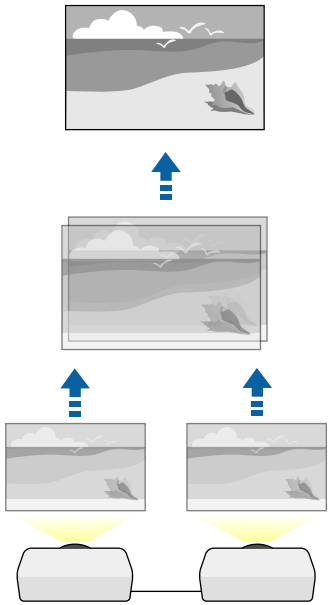

Execution Method

☛ **Extended** > **Multi-Projection** > **Simple Stacking**

Maintaining the Projector Quality

This section provides information about maintaining the quality of projected images.

Related Links

- "Panel Alignment" p.66
- "Color Uniformity" p.66
- "Refresh Mode" p.66
- "Light Source Calibration" p.66

Panel Alignment

You can adjust the pixel color shift for the LCD panel. You can adjust the pixels horizontally and vertically in 0.125 pixels increments within a range of ±3 pixels.

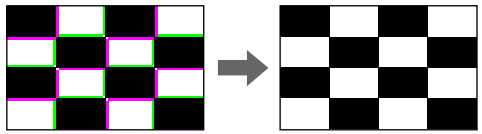

Execution Method

☛ **Extended** > **Display** > **Panel Alignment**

Color Uniformity

If the color tone of the image is uneven, you can adjust the color tone balance.

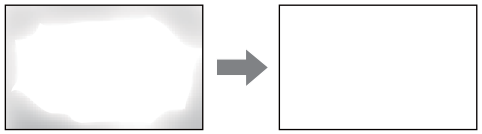

Execution Method

☛ **Extended** > **Display** > **Color Uniformity**

Refresh Mode

The refresh mode process clears any projected afterimage and turns off the projector after a specified period of time.

Execution Method

☛ **Reset** > **Refresh Mode**

Light Source Calibration

The light source calibration process optimizes the color balance of the currently projected image.

Execution Method

☛ **Reset** > **Light Source Calibration**

Managing the Projector's Settings

This section provides information about managing the projector's settings.

Related Links

- "Memory" p.67
- "Schedule Settings" p.67
- "Button Lock" p.67
- "Lens Lock" p.68

- "Password Protection" p.68

Memory

You can save customized settings and then select the saved settings whenever you want to use them.

Execution Method

- Press the [Memory] button on the remote control.
- Change the projector's menu:
  ☛ **Settings** > **Memory**

Schedule Settings

You can schedule up to 30 events to occur automatically on your projector, such as turning the projector on or off or switching the input source. The projector performs the selected events on the specified date and time in the schedule you set up.

Execution Method

☛ **Extended** > **Schedule Settings**

Button Lock

Button lock security to block operation of the projector using the buttons on the control panel or remote control.

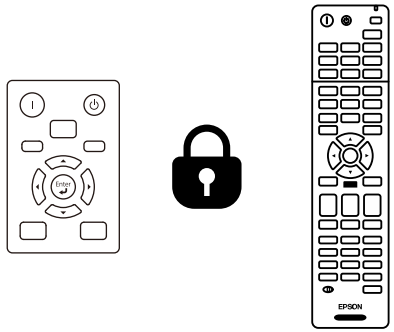

Even if you can lock the buttons on the control panel, you can still use the remote control as usual.

The remote control buttons lock feature locks the following buttons.

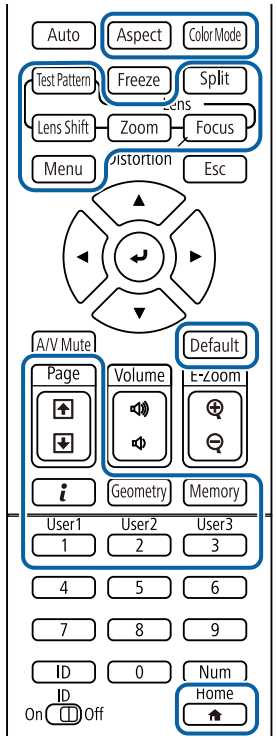

Execution Method

- To lock the control panel buttons, hold down the control panel lock button on the control panel.

  To unlock the control panel buttons, hold down the [Enter] button on the control panel for approximately 7 seconds.
- To lock the remote control buttons, hold down the [Home] button on the remote control for approximately 5 seconds.

  To unlock the remote control buttons, hold down the [Home] button again for approximately 5 seconds.

Lens Lock

You can disable [Lens Shift], [Zoom], and [Focus] button operations on the remote control.

Execution Method

☛ **Settings** > **Lock Setting** > **Lens Lock**

Password Protection

Password security to prevent people who do not know the password from using the projector, and prevent changes to the startup screen and other settings.

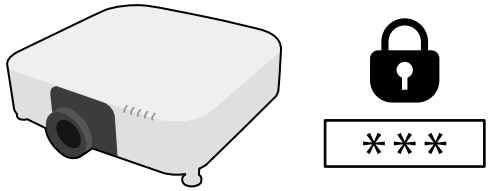

You can set up the following types of password security using one shared password:

- **Power On Protection** prevents anyone from using the projector without first entering a password. When plugging the power cord and turning on the projector at first time, you must enter the correct password. This also applies to **Direct Power On** and **Auto Power On**.
- **User's Logo Protection** prevents anyone from changing the custom screen displayed when the projector turns on, when no signal is being input, or when you use the A/V Mute feature. The custom screen discourages theft by identifying the projector's owner.
- **Network Protection** prevents anyone from changing the projector's **Network** settings.
- **Schedule Protection** prevents anyone from changing the projector's schedule settings.
- **Remote Camera Access** prevents anyone from using the Remote Camera Access function.

Execution Method

Hold the [Freeze] button on the remote control for approximately 5 seconds.

For the first time you use the projector, you must set a password. No password is set by default.

You can set a four-digit password. Hold down the [Num] button on the remote control and use the numeric buttons to set a password.

Attention

- If an incorrect password is entered three times in succession, the message **The projector's operation will be locked.** is displayed for approximately 5 minutes, and the projector switches to standby mode. If this happens, disconnect the power plug from the electrical outlet, reinsert it, and turn the projector back on. The projector displays the password entry screen again so that you can enter the correct password.
- If you have forgotten the password, make a note of the " **Request Code**: xxxxx" number that appears on the screen and contact Epson for help.
- If you continue to repeat the above operation and input the wrong password 30 times in succession, the message **The projector's operation will be locked. Contact Epson as described in your documentation.** is displayed and the projector does not accept any more password entries. Contact Epson for help.

After selecting the projector's menu settings for one projector, you can use the following methods to copy the settings to other projectors, as long as they are the same model.

- by using a USB flash drive
- by connecting a computer and projector using a USB cable
- by using Epson Projector Management

You cannot copy any information unique to an individual projector, such as **Light Source Hours** or **Status**.

- Perform batch setup before adjusting the image settings such as keystone distortion correction. Since image adjustment values are also copied to another projector, the adjustments you made before performing the batch setup are overwritten and the projected screen you adjusted may change.
- When copying the menu settings from one projector to another, user's logo is also copied. Do not register the information that you do not want to share between multiple projectors as a user's logo.
- Make sure **Batch Setup Range** is set to **Limited** if you do not want to copy the following settings:
  - **Password Protection** settings
  - **EDID** in the **Signal** menu
  - **Network** menu settings (except for the **Notifications** menu and the **Others** menu)

⚠ Caution

Epson takes no responsibility for batch setup failures and associated repair costs due to power outages, communication errors, or other problems that may cause such failures.

Related Links

- "Transferring Settings From a USB Flash Drive" p.70
- "Transferring Settings From a Computer" p.71
- "Batch Setup Error Notification" p.72

Transferring Settings From a USB Flash Drive

You can copy menu settings from one projector to another of the same model using a USB flash drive.

- The USB flash drive must use a FAT16/32 format and not incorporate any security function. Delete any files on the drive before using it for batch setup or the settings may not be saved correctly.
- You can also use this batch setup method from the projector's menu.

1. Disconnect the power cord from the projector, and check that all of the projector's indicators have turned off.
2. Connect an empty USB flash drive directly to the projector's USB-A port.
3. Hold down the [Esc] button on the remote control or the control panel and connect the power cord to the projector.
4. When all of the projector's indicators other than the WLAN (wireless LAN) indicator turn on, release the [Esc] button.

   The indicators start flashing and the batch setup file is written to the USB flash drive. When writing is finished, the projector turns off.

⚠ Caution

Do not disconnect the power cord or the USB flash drive from the projector while the file is being written. If the power cord or USB flash drive is disconnected, the projector may not start correctly.

5 Remove the USB flash drive.

> The file name for the batch setup file is PJCONFDATA.bin. If you need to change the file name, add text after PJCONFDATA using only alphanumeric characters. If you change the PJCONFDATA section of the file name, the projector may not be able to recognize the file correctly.

6 Disconnect the power cord from the projector to which you want to copy settings, and check that all of the projector's indicators have turned off.

7 Connect the USB flash drive containing the saved batch setup file to the projector's USB-A port.

8 Hold down the [Menu] button on the remote control or the control panel and connect the power cord to the projector.

9 When all of the projector's indicators other than the WLAN (wireless LAN) indicator turn on, release the [Menu] button. (The indicators remain on for approximately 75 seconds.)

When all of the indicators start flashing, the settings are being written. When writing is finished, the projector turns off.

> **⚠ Caution**
> Do not disconnect the power cord or the USB flash drive from the projector while the file is being written. If the power cord or USB flash drive is disconnected, the projector may not start correctly.

10 Remove the USB flash drive.

Transferring Settings From a Computer

You can copy menu settings from one projector to another of the same model by connecting the computer and projector with a USB cable.

- You can use this batch setup method with the following operating system versions:
  - Windows 8.1 and later
  - macOS 10.13.x and later
- You can also use this batch setup method from the projector's menu.

1 Disconnect the power cord from the projector, and check that all of the projector's indicators have turned off.

2 Connect a USB cable to the computer's USB port and to the projector's Service port.

3 Hold down the [Esc] button on the remote control or the control panel and connect the power cord to the projector.

4 When all of the projector's indicators other than the WLAN (wireless LAN) indicator turn on, release the [Esc] button.

The computer recognizes the projector as a removable disk.

5 Open the removable disk icon or folder, and save the batch setup file to the computer.

> The file name for the batch setup file is PJCONFDATA.bin. If you need to change the file name, add text after PJCONFDATA using only alphanumeric characters. If you change the PJCONFDATA section of the file name, the projector may not be able to recognize the file correctly.

6. Eject the USB device (Windows) or drag the removable disk icon to the Trash (Mac).

7. Disconnect the USB cable.
   The projector turns off.

8. Disconnect the power cord from the projector to which you want to copy settings, and check that all of the projector's indicators have turned off.

9. Connect the USB cable to the computer's USB port and to the projector's Service port.

10. Hold down the [Menu] button on the remote control or the control panel and connect the power cord to the projector.

11. When all of the projector's indicators other than the WLAN (wireless LAN) indicator turn on, release the [Menu] button.
    The computer recognizes the projector as a removable disk.

12. Copy the batch setup file (PJCONFDATA.bin) that you saved to your computer to the top level folder of the removable disk.

> Do not copy any files or folders other than the batch setup file to the removable disk.

13. Eject the USB device (Windows) or drag the removable disk icon to the Trash (Mac).

14. Disconnect the USB cable.
    When all of the indicators start flashing, the settings are being written. When writing is finished, the projector turns off.

> **⚠ Caution**
> Do not disconnect the power cord from the projector while the file is being written. If the power cord is disconnected, the projector may not start correctly.

Batch Setup Error Notification

The projector's indicators notify you if an error occurs during a batch setup operation. Check the status of the projector's indicators and follow the instructions described in the table here.

Indicator status	Problem and solutions
• Laser: Orange - flashing fast • Temp: Orange - flashing fast	The batch setup file may be corrupt, or the USB flash drive may not be connected correctly. Disconnect the USB flash drive, unplug and then plug in the projector's power cord, and then try again.
• Power: Blue - flashing fast • Status: Blue - flashing fast • Laser: Orange - flashing fast • Temp: Orange - flashing fast	Writing the settings may have failed and an error may have occurred in the projector's firmware. Stop using the projector, remove the power plug from the electrical outlet. Contact Epson for help.

Menu Settings

Refer to these sections to learn more about your projector's settings.

Related Links

- "Image Menu" p.74
- "Signal Menu" p.80
- "Settings Menu" p.85
- "Extended Menu" p.96
- "Network Menu" p.111
- "Info Menu" p.121
- "Reset Menu" p.124

Settings on the **Image** menu let you adjust the quality of your image. The available settings depend on the currently selected color mode and input source. The settings are saved separately for each selected color mode.

Related Links

- "Color Mode" p.74
- "Brightness" p.74
- "Contrast" p.75
- "Color Saturation" p.75
- "Tint" p.75
- "Sharpness" p.75
- "White Balance" p.75
- "4K Enhancement" p.75
- "Image Preset Mode" p.76
- "Frame Interpolation" p.76
- "Deinterlacing" p.77
- "Noise Reduction" p.77
- "MPEG Noise Reduction" p.77
- "Super-resolution" p.77
- "Detail Enhancement" p.78
- "Reset (Image Enhancement)" p.78
- "Scene Adaptive Gamma" p.78
- "Gamma" p.78
- "RGBCMY" p.78
- "Dynamic Contrast" p.79
- "Lights-Out Control" p.79
- "Reset (Image menu)" p.79

Color Mode

☛ **Image** > **Color Mode**

☛ **Extended** > **Multi-Projection** > **Screen Matching** > **Color Mode**

You can adjust the vividness of image colors for various image types and environments. The brightness of the image varies depending on the mode selected.

Dynamic
This is the brightest mode. Ideal for use in a bright room.

Presentation
The images are vivid and brought to life. Ideal for making presentations or watching a TV program in a bright room.

Natural
Reproduces colors faithfully. Ideal for projecting still pictures such as photos.

Cinema
Gives images a natural tone. Ideal for watching films in a dark room.

BT.709
Produces images that conform to the ITU-R BT.709.

DICOM SIM
This produces images with clear shadows. Ideal for projecting X-ray photographs and other medical images. The projector is not a medical device and cannot be used for medical diagnosis.

Multi-Projection
Minimize the color tone difference between each projected image. Ideal for projecting from multiple projectors.



You can also change the projector's Color Mode using the [Color Mode] button on the remote control.

Brightness

☛ **Image** > **Brightness**

You can lighten or darken the overall image.



This setting does not affect light source brightness. To change the light source brightness, select **Light Source Mode** in the **Settings** menu.

☛ **Settings** > **Brightness Settings** > **Light Source Mode**

Contrast

☛ **Image** > **Contrast**

You can adjust the difference between light and dark areas of the image.

Color Saturation

☛ **Image** > **Color Saturation**

You can adjust the intensity of the image colors.

Tint

☛ **Image** > **Tint**

You can adjust the balance of green to magenta tones in the image.

Sharpness

☛ **Image** > **Sharpness**

You can adjust the sharpness or softness of image details.

Standard

You can adjust the image sharpness so that it is sufficiently balanced.

Thin Line Enhancement

Higher values enhance the details such as hair or fabric patterns.

Thick Line Enhancement

Higher values enhance the outline, background, and the other main parts of the objects in the image to show them clearly.

White Balance

☛ **Image** > **White Balance**

You can adjust the overall tint of the image.

Color Temp.

You can adjust the overall tint of the image within a range from 3200K to 10000K. Higher values tint the image blue and lower values tint the image red.

When **Color Mode** is set to **Dynamic**, the set Color Temp. may differ from the actual Color Temp. of the light from the projector. Use this menu as a guide.

G-M Correction

Higher values tint the image green and lower values tint the image red.

Offset R/Offset G/Offset B/Gain R/Gain G/Gain B

You can adjust the individual R (red), G (green), and B (blue) components of the offset and gain.

4K Enhancement

☛ **Image** > **Image Enhancement** > **4K Enhancement**

You can project an image at a doubled resolution by diagonally shifting 1 pixel in increments of 0.5 pixels. A high-resolution image signal is projected in fine detail.

Off

If a signal that exceeds the panel resolution of this projector is input, the image is displayed according to the panel resolution of this projector.

Full HD

For a signal with a resolution of 1080i/1080p/WUXGA or higher.

WUXGA+

For a signal with a resolution that exceeds WUXGA. When projecting a high-resolution movie, you can project a high-definition image by using this setting with **Image Preset Mode**.

- You cannot select this setting when the **Aspect** setting is set to **Native** in the projector's **Signal** menu.
- When projecting from multiple projectors, select **Off** to unify each image.
- **Off** is ideal for projecting presentation materials from computers and so on.
- If you select Full HD or WUXGA+, the status corrected using the following function is canceled.
  - Edge Blending
  - Scale
  - Curved Surface
  - Point Correction
  - Corner Wall
  - E-Zoom
  - Split Screen
  - Frame Interpolation
  - Noise Reduction
  - MPEG Noise Reduction

  When you change the **4K Enhancement** setting to **Off**, the settings return to their previous state.

Image Preset Mode

☛ **Image** > **Image Enhancement** > **Image Preset Mode**

You can set the **Image Enhancement** options as a batch using preset values.

The following settings are saved in the preset options.

- Frame Interpolation
- Deinterlacing
- Noise Reduction
- MPEG Noise Reduction
- Super-resolution
- Detail Enhancement

- To minimize delays, select **Off**.
- If you select **Off**, you cannot set the other items in the **Image Enhancement** setting.
- After selecting **Preset 1** to **Preset 5**, you can fine tune each setting individually. The settings value in the preset option are overwritten.
- The settings value are overwritten separately when 4K Enhancement is enabled and disabled.

Frame Interpolation

☛ **Image** > **Image Enhancement** > **Frame Interpolation**

You can play fast moving images smoothly by producing intermediate frames between the original frames.

If your resulting images contain noise, set to **Off**.

- You cannot select this setting in the following cases.
  - **4K Enhancement** is enabled.
  - A signal with a resolution that exceeds WUXGA is input.
  - **Aspect** is set to **V-Zoom**.
  - **Scale** is set to **Auto** or **Manual**.
  - **Edge Blending** is set to other than **Off**.
  - **Image Preset Mode** is set to **Off**.
  - While performing **E-Zoom**

Deinterlacing

☛ **Image** > **Image Enhancement** > **Deinterlacing**

You can set whether or not to convert interlaced-to-progressive signals for certain video image types.

Off
For fast-moving video images.

Video
For most video images.

Film/Auto
For movies, computer graphics, and animation.

Setting is only displayed in the following cases.

- The current signal is interlaced signal (480i/576i/1080i).
- **Image Preset Mode** is enabled.

Noise Reduction

☛ **Image** > **Image Enhancement** > **Noise Reduction**

You can reduce flickering in images when inputting progressive signals or progressive interlace signals.

- You cannot select this setting in the following cases.
  - **4K Enhancement** is enabled.
  - A signal with a resolution that exceeds WUXGA is input.
  - **Image Preset Mode** is set to **Off**.

MPEG Noise Reduction

☛ **Image** > **Image Enhancement** > **MPEG Noise Reduction**

You can reduce the noise or artifacts seen in MPEG video.

- You cannot select this setting in the following cases.
  - **4K Enhancement** is enabled.
  - A signal with a resolution that exceeds WUXGA is input.
  - **Image Preset Mode** is set to **Off**.

Super-resolution

☛ **Image** > **Image Enhancement** > **Super-resolution**

You can reduce blurring when projecting low resolution images.

Fine Line Adjust
Higher values enhance details such as hair or fabric patterns.

Soft Focus Detail
Higher values enhance the outline, background, and the other main parts of the objects in the image to show them clearly.

You cannot select this setting when the **Image Preset Mode** setting is set to **Off**.

Detail Enhancement

☛ **Image** > **Image Enhancement** > **Detail Enhancement**

You can create a more emphatic texture and material feel of the image.

Strength
Higher values enhance the contrast.

Range
Higher values widen the range of detailed enhancement.

- Depending on the image, a highlight may be noticeable at the border between colors. If this bothers you, set a smaller value.
- You cannot select this setting when the **Image Preset Mode** setting is set to **Off**.

Reset (Image Enhancement)

☛ **Image** > **Image Enhancement** > **Reset**

You can reset the settings on the **Image Enhancement** setting to their default preset settings.

You cannot select this setting when the **Image Preset Mode** setting is set to **Off**.

Scene Adaptive Gamma

☛ **Image** > **Advanced** > **Scene Adaptive Gamma**

You can adjust the coloring according to the scene and obtain a more vivid image.

Higher values enhance the more the contrast.

Gamma

☛ **Image** > **Advanced** > **Gamma**

You can adjust the coloring by selecting one of the gamma correction values, or referring to a gamma graph. If you want to make finer adjustments, select **Customized**.

When you select a smaller value, you can reduce the overall brightness of the image to make the image sharper. When you select a larger value, the dark areas of images become brighter, but the color saturation for lighter areas may become weaker.

- Project a still picture to adjust the Gamma. You cannot adjust the Gamma correctly when projecting movies.
- If you set the **Color Mode** setting to **DICOM SIM** in the projector's **Image** menu, select the adjustment value according to the projection size.
  - If the projection size is 120 inches or less, select a small value.
  - If the projection size is 120 inches or more, select a large value.
- Medical images may not be reproduced correctly depending on your settings and screen specifications.

RGBCMY

☛ **Image** > **Advanced** > **RGBCMY**

You can adjust the Hue, Saturation, and Brightness of each color R (red), G (green), B (blue), C (cyan), M (magenta), Y (yellow) individually.

Dynamic Contrast

☛ **Image** > **Dynamic Contrast**

You can adjust the projected luminance based on the image brightness.

Dynamic Contrast
Set to **On** to automatically adjust the amount of light.

Response Speed
Select **High Speed** to adjust the amount of light as soon as the scene changes.

Black Level
Set the black level when the brightness level of the image signal is zero. When you select **0%**, the light source turns off.

Lights-Out Control

☛ **Image** > **Lights-Out Control**

You can set the light source to turn off automatically.

Lights-Out Control
Set to **On** to automatically turn off the light source when the signal level falls below the reference level for a set period of time.

Lights-Out Signal Level
Set the brightness level for the video signal being controlled. After turning off automatically, it turns on immediately when exceeding the specified image level.

Lights-Out Timer
Set the amount of time before automatically turning off the light source.

Reset (Image menu)

☛ **Image** > **Reset**

You can reset all adjustment values on the **Image** menu to their default settings.

Normally, the projector automatically detects and optimizes the input signal settings. If you need to customize the settings, you can use the **Signal** menu. The available settings depend on the currently selected input source. The settings are saved separately for each selected input source.

Related Links

- "Resolution" p.80
- "Aspect" p.80
- "Tracking" p.81
- "Sync." p.81
- "Position" p.81
- "Auto Setup" p.81
- "Overscan" p.82
- "Blanking" p.82
- "Color Space" p.82
- "Dynamic Range" p.82
- "Video Range" p.83
- "EDID" p.83
- "Scale" p.83
- "Reset (Signal menu)" p.84

Resolution

☛ **Signal** > **Resolution**

You can set the input signal resolution.

Auto

Select to automatically identify the resolution of the input signal.

If not detected automatically using the **Auto** option, select the following options.

Wide

For wide screens.

Normal

For 4:3 or 5:4 screens depending on the connected computer.

Manual

You can specify the resolution. This is ideal when connected computer is fixed.



Setting is only displayed when the current source is Computer.

Aspect

☛ **Signal** > **Aspect**

The projector can display images in different width-to-height ratios called aspect ratios. Normally, the input signal from your video source determines the image's aspect ratio. However, for certain images you can change the aspect ratio to fit your screen.

Auto

Automatically sets the aspect ratio according to the input signal and the **Resolution** setting.

Normal

Displays images using the full projection area and maintains the aspect ratio of the image.

4:3

Converts the aspect ratio of the image to 4:3.

16:9

Converts the aspect ratio of the image to 16:9.

Full

Displays images using the full size of the projection area, but does not maintain the aspect ratio.

H-Zoom/V-Zoom

Displays images using the full width (H-Zoom) or full height (V-Zoom) of the projection area and maintains the aspect ratio of the image. Areas that exceed the edges of the projected screen are not projected.

Native

Displays images as is (aspect ratio and resolution are maintained). Areas that exceed the edges of the projected screen are not projected.

- Available only when the current source is set to one of the following:
  - Computer
  - HDMI
  - DVI-D
  - HDBaseT
  - SDI (EB-PU2220B)
- Available only when the **Scale** setting is set to **Off** or the **Scale Mode** setting is set to **Full Display**.

  ☛ **Signal** > **Scale** > **Scale Mode**
- Set the **Screen Type** setting in the projector's **Extended** menu before changing the aspect ratio.

  ☛ **Extended** > **Display** > **Screen** > **Screen Type**
- To display images without black bars, set **Resolution** to **Wide** or **Normal** in the projector's **Signal** menu according to the computer's resolution.
- The available aspect ratio setting varies depending on the selected **Screen Type** setting and the input signal from your image source.
- Note that using the aspect ratio function of the projector to reduce, enlarge, or split the projected image for commercial purposes or for public viewing may infringe upon the rights of the copyright holder of that image based on copyright law.
- If there are margins between the edge of the image and the projected screen frame, you can adjust the position of the image using the **Screen Position** setting in the projector's **Extended** menu.

  ☛ **Extended** > **Display** > **Screen** > **Screen Position**
- You can change the projector's Aspect using the [Aspect] button on the remote control.

Tracking

☛ **Signal** > **Tracking**

You can adjust the signal to eliminate vertical stripes in computer images.

Setting is only displayed when the current source is Computer.

Sync.

☛ **Signal** > **Sync.**

You can adjust the signal to eliminate fuzziness or flickering in computer images.

Setting is only displayed when the current source is Computer.

Position

☛ **Signal** > **Position**

You can adjust the image location on the screen.

Setting is only displayed when the current source is Computer.

Auto Setup

☛ **Signal** > **Auto Setup**

Set to **On** to automatically optimize computer image quality.

Setting is only displayed when the current source is Computer.

Overscan

☛ **Signal** > **Overscan**

You can change the projected image ratio to make the edges visible by a selectable percentage or automatically.

Available only when the current source is set to one of the following:

- HDMI
- DVI-D
- HDBaseT
- SDI (EB-PU2220B)

Blanking

☛ **Signal** > **Blanking**

You can hide images in the specified area.

Use the arrow buttons on the control panel or remote control to adjust the area. You can hide up to half of the projected image in each direction (except for one pixel).

Setting is only displayed when the **Content Playback** setting is set to **Off** in the projector's **Settings** menu.

Color Space

☛ **Signal** > **Color Space**

You can switch the color space that can handle the color information of the input image.

Select **Auto** to apply a suitable color space for the AVI InfoFrame of the image.

Setting is only displayed in the following cases.

- The current source is HDMI, HDBaseT, or SDI (EB-PU2220B).
- **Color Mode** is set to other than BT.709 or DICOM SIM.

Dynamic Range

☛ **Signal** > **Dynamic Range**

You can set the video range to match the setting of input source.

Select **Auto** to automatically identify the dynamic range of the input signal.

The result for your selected setting is displayed as **Signal Status**.

HDR10 Setting

You can adjust the PQ curve of the dynamic range in the HDR PQ (Perceptual Quantizer) method.

HLG Setting

You can adjust the HLG curve of the dynamic range in the HDR HLG (Hybrid Log Gamma) method.

- Setting is only displayed in the following cases.
  - The current source is HDMI, HDBaseT, or SDI (EB-PU2220B).
  - **Color Mode** is set to other than BT.709 or DICOM SIM.
- **HDR10 Setting** is only available when **Signal Status** is set to **HDR10**, or **Dynamic Range** is set to **HDR10**.
- **HLG Setting** is only available when **Signal Status** is set to **HLG**, or **Dynamic Range** is set to **HLG**.

Video Range

☛ **Signal** > **Advanced** > **Video Range**

You can set the video range to match the setting of input source from the HDMI, DVI-D, or HDBaseT port.

Limited (16-235)
For the color tone range 16 to 235.

Full (0-255)
For the color tone range 0 to 255.

EDID

☛ **Signal** > **Advanced** > **EDID**

Even if you setup multiple displays with different resolutions, you can set the same EDID as the standard display and switch the EDID of the current source to unify the EDID across the displays.

Preset EDID
You can set the EDID options as a batch using preset values.

The following settings are saved in the preset options.

- Resolution
- Refresh Rate
- Color Depth

You can change the preset settings if necessary.

- Setting is only displayed when the current source is HDMI, HDBaseT, or DVI-D.
- Select **Reset** to reset all adjustment values for EDID to their default values.

Scale

☛ **Signal** > **Scale**

☛ **Extended** > **Multi-Projection** > **Scale**

You can enlarge or reduce the image in the vertical and horizontal directions. When using multiple projectors to project one image, you can adjust the scale of the image displayed by each projector.

Scale
When set to **Auto**, the clip position is set automatically depending on the **Edge Blending** and **Tiling** settings. After selecting **Auto**, you can fine tune manually.

Select **Manual** to adjust the clip range and position manually.

Scale Mode
Select how to change the magnification.

- **Zoom Display** to maintain the image position and aspect ratio.
- **Full Display** to adjust the image according to the image position and aspect ratio.

Scale Horizontally/Scale Vertically
You can adjust the magnification horizontally and vertically in 0.01x increments, and enlarge or reduce the image. (Minimum magnification of 0.5 to maximum magnification of 10.)

Clip Adjustment
Use the arrow buttons to adjust the coordinates and size of each image as you view the screen.

Clip Range
You can view the clipped area you selected.

Reset (Signal menu)

☛ **Signal** > **Reset**

You can reset all adjustment values on the **Signal** menu to their default settings, except for the following:

- EDID

Options on the **Settings** menu let you customize various projector features.

Related Links

- "Geometry Correction" p.85
- "Split Screen" p.86
- "Volume" p.87
- "HDMI Link" p.87
- "Control Panel Lock" p.88
- "Lens Lock" p.88
- "Light Source Mode" p.88
- "Brightness Level" p.88
- "Constant Brightness" p.89
- "Estimated Remains" p.89
- "Energy Saving Mode" p.90
- "Remote Receiver" p.91
- "User Button" p.91
- "Test Pattern" p.91
- "Memory" p.92
- "Content Playback" p.92
- "NFC Settings" p.95
- "Reset (Settings menu)" p.95

Geometry Correction

☛ **Settings** > **Geometry Correction**

☛ **Extended** > **Multi-Projection** > **Geometry Correction**

☛ **Extended** > **Multi-Projection** > **Simple Stacking** > **Point Correction**

You can adjust image shape to rectangular. After correction, your image is slightly smaller.

You can check the available adjustment range in the projector's *Specifications*.

Off

Temporarily cancels geometry correction. Even when set to **Off**, the correction values are saved.

H/V-Keystone

Manually corrects distortion in the horizontal and vertical directions independently. If the image aspect is incorrect, adjust the image balance by using **V-Balance** and **H-Balance**.

You cannot combine with other correction methods.

Quick Corner

Corrects each of the four corners of the projected image independently.

Curved Surface

Corrects the corners and sides of an image projected on a curved surface with the same radius.



- Move the lens position to the home position.
- If a large amount of adjustment is performed, the focus may not be uniform even after making adjustments.
- If you set the **Maintain Aspect Ratio** setting to **On** after correcting the corrections may not be applied. Reset the corrections to their default values or reduce the amount of correction, and try it again.
- If you change the standard line during correcting, the present settings are reset.

Corner Wall

Corrects the corners and sides of an image projected on a curved surface with right angles.



- Move the lens position to the home position.
- If a large amount of adjustment is performed, the focus may not be uniform even after making adjustments.
- We recommend you adjust the image shape based on the point nearest to the center of the screen.

Point Correction

Divides the projected image into a grid and corrects the distortion in 0.5 pixel increments by moving the selected point of intersection in any direction. You can move the points on the grid between 0.5 to 600 pixels in any direction, including outside the projection range.

Memory

You can save the shape of an image you have adjusted and load it when needed.

- You can also open the Geometry Correction screen using the [Geometry] button on the control panel or remote control.
- You can also open the Memory screen using the [Memory] button on the remote control.

Split Screen

☛ **Settings** > **Split Screen**

You can simultaneously project two images from different image sources.

Screen Size

Select the screen size.

Depending on the video signals that are input, the images on the left and right may not appear to be the same size even if you select **Equal**.

Source

Select the input source.

- The following input source combinations cannot be projected on a split screen.
  - Computer and LAN
  - DVI-D and HDMI
  - Computer and SDI (EB-PU2220B)
  - LAN and SDI (EB-PU2220B)
- Input signals with a horizontal resolution exceeding 1920 are not supported.

Swap Screens

You can swap images that are being projected on the left and right.

Audio Source

Select the screen from which you want to hear audio.

When you select **Auto**, audio is output from the enlarged screen. If the screen size is set to **Equal**, audio is output from the screen on the left.

- While using the split screen feature, other projector features may not be available and some settings may be automatically applied to all images.
- You cannot perform split screen projection when the **Content Playback** setting is set to **On** in the projector's **Settings** menu.
- You can also open the Split Screen Setup screen using the [Split] button on the remote control.

Related Links

• "Split Screen Projection Restrictions" p.86

Split Screen Projection Restrictions

Operating restrictions

The following operations cannot be performed during split screen projection.

- Setting the projector's menu
- E-Zoom
- Switching the aspect mode (the aspect mode is set to **Normal**)
- Operations using the [User] button on the remote control

Image restrictions

- If you make adjustments such as **Brightness**, **Contrast**, **Color Saturation**, **Tint**, and **Sharpness** in the projector's **Image** menu, you can apply them only to the image on the left. Default adjustments are applied to the image on the right. Adjustments that affect the entire projected image such as **Color Mode** and **Color Temp.** are applied for both left and right images.
- Even if you make adjustments for **Noise Reduction** and **Deinterlacing** in the projector's **Image** menu, **Noise Reduction** is set to 0 and **Deinterlacing** is set to **Off** for the image on the right.

  ☛ **Image** > **Image Enhancement** > **Noise Reduction**
- Even if you set **Display Background** to **Logo** in the projector's **Extended** menu, the blue screen appears when no image signal is being input.

Volume

☛ **Settings** > **Volume**

You can adjust the volume of the speaker connected to the projector's Audio Out port.

> **⚠ Caution**
>
> Do not start a presentation at a high volume setting. Sudden loud noises may cause hearing loss.
>
> Always lower the volume before powering off, so that you can power on and then gradually increase the volume.

HDMI Link

☛ **Settings** > **HDMI Link**

You can adjust the HDMI Link options that allow the projector remote to control HDMI-connected devices.

Device Connections
The devices connected to the HDMI ports are listed.

HDMI Link
Set to **On** to enable the HDMI Link features.

Audio Out Device
To output audio from the speaker connected to the projector's Audio Out port, select **Projector**. When an audio/video system is connected to the projector and you want to output audio from it, select **AV System**. When an audio/video system is not connected to the projector, audio is output from the speaker connected to the Audio Out port even if **Audio Out Device** is set to **AV System**.

Power On Link
You can control what happens when you turn on the projector or connected device.

- **Bidirectional**: automatically turns on the connected device when you turn on the projector, and vice versa.
- **Device -> PJ**: automatically turns on the projector when you turn on the connected device.
- **PJ -> Device**: automatically turns on the connected device when you turn on the projector.

Power Off Link
You can control whether connected devices are turned off when you turn off the projector.

Link Buffer
You can improve the performance of the linked operations by changing the settings if the HDMI Link function is not working correctly.

Set the **HDMI Link** setting to **On** first to adjust the options.

Control Panel Lock

☛ **Settings** > **Lock Setting** > **Control Panel Lock**

You can control projector button locking to secure the projector.

Full Lock
All buttons locked.

Partial Lock
All buttons except for the [On] button and the [Standby] button locked.

Off
No buttons locked.

- You can control projector button locking using the control panel lock button on the control panel.
- To unlock the buttons, hold down the [Enter] button on the control panel for approximately 7 seconds. A message is displayed and the lock is released.

Lens Lock

☛ **Settings** > **Lock Setting** > **Lens Lock**

You can disable [Lens Shift], [Zoom], and [Focus] button operations on the remote control.

Light Source Mode

☛ **Settings** > **Brightness Settings** > **Light Source Mode**

☛ **Extended** > **Multi-Projection** > **Screen Matching** > **Brightness Settings** > **Light Source Mode**

You can select the brightness for the light source.

Normal
Maximum brightness. This makes the light source operation time approximately 20,000 hours.

Quiet
70% brightness with reduced fan noise. This makes the light source operation time approximately 20,000 hours.

Extended
70% brightness and extends the life expectancy of the light source. This makes the light source operation time approximately 30,000 hours.

Custom
You can select a custom brightness level.

Setting is only displayed when **Constant Brightness** is set to **Off**.

Brightness Level

☛ **Settings** > **Brightness Settings** > **Brightness Level**

☛ **Extended** > **Multi-Projection** > **Screen Matching** > **Brightness Settings** > **Brightness Level**

You can select the **Custom** brightness level you want.

Setting is only displayed when **Light Source Mode** is set to **Custom**.

Constant Brightness

☛ **Settings** > **Brightness Settings** > **Constant Brightness**

☛ **Extended** > **Multi-Projection** > **Screen Matching** > **Brightness Settings** > **Constant Brightness**

You can maintain the brightness of the light source set in the **Brightness Level** setting.

- Setting is only displayed when **Light Source Mode** is set to **Custom**.
- When set to **On**, you cannot change the settings for **Light Source Mode** and **Brightness Level**.
- When set to **Off**, the **Brightness Level** setting changes according to the status of the light source.
- When you use this function, we recommend setting **Energy Saving Mode** to **Off**.

  ☛ **Settings** > **Brightness Settings** > **Energy Saving Mode**

Estimated Remains

☛ **Settings** > **Brightness Settings** > **Estimated Remains**

☛ **Extended** > **Multi-Projection** > **Screen Matching** > **Brightness Settings** > **Estimated Remains**

You can check how long the projector can maintain constant brightness.

Setting is only displayed when **Constant Brightness** is set to **On**.

Related Links

- "Constant Brightness Usage Hours" p.89
- "Light Source Operation Time" p.90

Constant Brightness Usage Hours

If you turn on **Constant Brightness**, the number of hours the projector can maintain constant brightness is displayed as **Estimated Remains**.

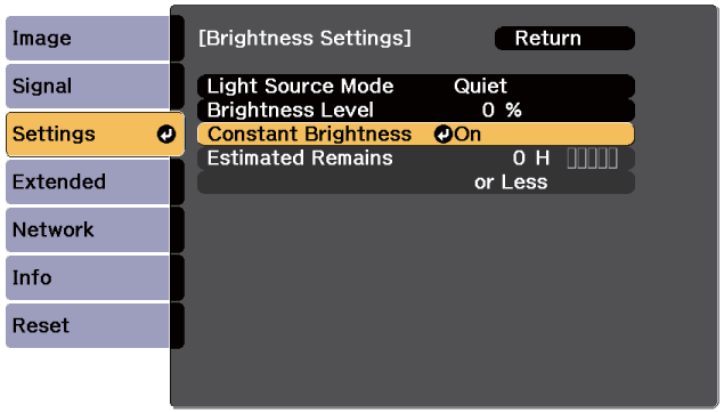

Display level	Estimated remaining hours
▮▮▮▮▮	10,000 or more hours
▮▮▮▮▯	8,000 to 9,999 hours
▮▮▮▯▯	6,000 to 7,999 hours
▮▮▯▯▯	4,000 to 5,999 hours
▮▯▯▯▯	2,000 to 3,999 hours
▯▯▯▯▯	0 to 1,999 hours

The number of hours displayed as **Estimated Remains** is just a guide.

Light Source Operation Time

The light source operation time varies depending on the **Brightness Level** setting and whether **Constant Brightness** is on or off.

- The light source operation time varies depending on the environmental conditions and usage.
- The hours listed here are an approximate and are not guaranteed.
- You may need to replace internal parts sooner than the estimated light source operation time.
- If **Constant Brightness** is turned on, and you have exceeded the usage hours listed here, you may not be able to select a high **Brightness Level** setting.

Constant Brightness **off**

Brightness Level setting	Time before the brightness of the light source is reduced by half (approximate)
100%	20,000 hours
90%	21,000 hours
80%	24,000 hours
70%	30,000 hours
60%	37,000 hours
50%	47,000 hours
40%	61,000 hours
30% or less	71,000 hours or more

Constant Brightness **on**

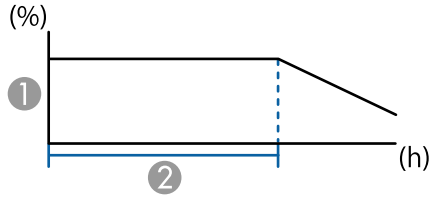

1 Brightness level
2 Time the projector can maintain constant brightness (approximate)

Brightness Level setting	Time the projector can maintain constant brightness (approximate)
85%	6,000 hours
80%	10,000 hours
70%	19,000 hours
60%	29,000 hours
50%	41,000 hours
40%	56,000 hours
30% or less	78,000 hours or more

Energy Saving Mode

☛ **Settings** > **Brightness Settings** > **Energy Saving Mode**

When set to **On**, you can reduce the power consumption by automatically adjusting the light source brightness. The light source brightness is gradually adjusted over a period of 60 minutes and it does not ruin the image appearance.

When you use the **Multi-Projection** or **Constant Brightness** features, set to **Off** to correct differences in the brightness between projectors.

This function is disabled in the following cases:

- When **Edge Blending** is set to **Blending/Black Level** or **Black Level**.
  ☛ **Extended** > **Multi-Projection** > **Edge Blending**
- When **Color Mode** is set to **Multi-Projection**.
  ☛ **Image** > **Color Mode**
- When **Light Source Mode** is set to **Custom**.
  ☛ **Settings** > **Brightness Settings** > **Light Source Mode**

Remote Receiver

☛ **Settings** > **Remote Receiver**

When the remote control does not operate stably due to noise from other devices, you can limit reception of remote control signals to the selected receiver; **Off** turns off all receivers.

You can turn on all remote receivers by holding down the [Menu] button on the remote control for approximately 15 seconds.

User Button

☛ **Settings** > **User Button**

You can assign the following menu options to the [User] buttons on the remote control for one-touch access.

- Light Source Mode
- Multi-Projection
- Resolution
- On-Screen Display
- Display the QR Code
- Image Enhancement
- Frame Interpolation
- Link Menu
- Content Playback
- USB

The USB option is only displayed when **Content Playback** is set to **On**.

Test Pattern

☛ **Settings** > **Test Pattern**

You can display a test pattern to assist in focusing and zooming the image and correcting image shape.

- Press the [Page] button to change the test pattern while displaying a test pattern.
- Press the [Esc] button to cancel pattern display.
- The test pattern's shape is determined by the **Screen Type** setting. Be sure to set the correct screen type before adjusting with the test pattern.
  ☛ **Extended** > **Display** > **Screen** > **Screen Type**
- To set menu items that cannot be set while the test pattern is being displayed or to fine-tune the projected image, project an image from the connected device.
- You can also display a test pattern using the [Test Pattern] button on the control panel or remote control.

Memory

☛ **Settings** > **Memory**

You can save customized settings and then select the saved settings whenever you want to use them.

Memory

You can save the following settings. You can register up to 10 memories with different names.

- **Image** menu settings
- **Scale** in the **Signal** menu
- **Light Source Mode** and **Brightness Level** in the **Settings** menu
- **Edge Blending**, **Color Matching**, and **Black Level** in the **Extended** menu

Lens Position

You can save the position of the lens adjusted using lens shift, zoom, focus, and distortion. You can register up to 10 memories with different names.

Geometry Correction

You can save the adjustment value of the geometry correction. You can register up to 3 memories with different names.

You can use the following options for each memory type.

Load Memory

You can load the saved memory. The settings applied to the current image are replaced with the settings in the memory.

Save Memory

You can save your current settings to memory.

Erase Memory

You can erase the selected memory settings.

Rename Memory

You can rename a saved memory.

Reset Memory Settings

You can delete all saved memories.

- A memory name that has already been used is indicated by a blue mark. Saving over a previously saved memory overwrites the settings with your current settings.
- The lens position when a memory is loaded may not completely match the lens position when the memory was saved. If there is a large discrepancy between the lens position, calibrate the lens.
- You can also open the Memory screen using the [Memory] button on the remote control.

Content Playback

☛ **Settings** > **Content Playback**

You can easily project your digital signage content: playlists that contain images and movies saved on an external storage device.

Content Playback

Set to **On** to play back a playlist.

Overlay Effect

You can add color and shape effects to the projected image.

USB Viewer

You can select and play back a playlist saved on the USB flash drive.

- You cannot select the **Overlay Effect** setting in the following cases.
  - When **Edge Blending** is set to other than **Off** in the projector's **Extended** menu.
  - When the current source is USB and there is no playlist being played.
  - When the current source is USB and a writing error has occurred.
- You can use the following methods to create playlists.
  - Using Epson Projector Content Manager on your computer.

    You can download and install Epson Projector Content Manager from the following Web site.

    epson.sn
  - Using Epson Web Control with a Web browser.
  - Using Epson Creative Projection on iOS devices.

    You can download Epson Creative Projection from the App Store. Any fees incurred when communicating with the App Store are the responsibility of the customer.
- When you assign the USB function to the [User] button on the remote control using the **User Button** setting in the projector's **Settings** menu, you can start the playlist by pressing the [User] button. When there is a timetable assigned, the playlist will play back according to the schedule in the timetable.
- You can also hold down the [Num] and numeric buttons to project your favorite playlist. You can set a remote control shortcut key using the software you used to create the playlists.

Related Links

- "Creating Playlists Using Epson Web Control" p.93
- "Supported Content Playback Mode File Types" p.94
- "Content Playback Mode Restrictions" p.95

Creating Playlists Using Epson Web Control

In Content Playback mode, you can create playlists using a Web browser and save them to a USB flash drive connected to a projector on a network.

Attention

Do not remove the USB flash drive from the projector or disconnect the projector's power cord while creating playlists. Data saved on the USB flash drive may be damaged.

1. Make sure the projector is operating in Content Playback mode.
2. Make sure your computer or device is connected to the same network as the projector.
3. Make sure a USB flash drive is connected to the projector's USB-A port.
4. Start your Web browser on your computer or device.
5. Go to the Epson Web Control screen by entering the projector's IP address into the browser's address box. When entering an IPv6 address, wrap the address with [and].
6. Select **USB Memory Device**.
7. Select **Upload New Data**.
8. Select the images or movies you want to add to the playlist.

You can upload .avi, .jpeg (.jpg), .png, .bmp, or .gif files.

If you want to add .mp4 or .mov files to the playlist, use the Epson Projector Content Manager software or the Epson Creative Projection app.

The selected files are copied to the connected USB flash drive.

9 Do one of the following:

- To add them to the existing playlist, select **Add to Playlist** and select the playlist you want to add them to.
- To create a new playlist and add them to it, select **Create New Playlist**.

10 Edit the playlist.

11 When you have finished editing the playlist, select **Finish**.

- See the section in this guide covering Web Control Options for details.
- You can play the playlist from the **Remote** or **Playlist** screen.
- When you want to specify when the playlist starts and finishes, schedule the playlist using the Epson Projector Content Manager software.

Related Links

- "Epson Web Control" p.140

Supported Content Playback Mode File Types

You can project these types of files using the projector's Content Playback feature.

File contents	File type (extension)	Details

Image	.jpg	• We recommend JPEGs taken with a digital still camera that complies with the Exif standard.
		• The number of vertical and horizontal pixels must be a multiple of 8.
		• Make sure the file is not:
		  • Progressive format
		  • Above 8192 × 8192 resolution

	.bmp	Make sure the file is not: • Above 1280 × 800 resolution

	.gif	• The image must be a transparent gif with a black background.
		• Make sure the file is not:
		  • Above 1280 × 800 resolution
		  • Animated
		  • Interlaced

	.png	Make sure the file is not: • Above 1280 × 800 resolution • Interlaced
Movie	.avi (Motion JPEG)	• Version: AVI 1.0 only • Resolution: 1280 × 800 or less • Size: 2 GB or less • Movie Codec: Motion JPEG • Audio Codec: LPCM, IMA ADPCM, or no audio • Audio Sampling Rate: 11.025 kHz, 22.05 kHz, 44.1 kHz, 16 kHz, 24 kHz, 32 kHz, or 48 kHz

Content Playback Mode Restrictions

Operating restrictions

The following operations cannot be performed in Content Playback mode.

- Changing the **Color Temp.** setting in the **Image** menu (when **Warm White** or **Cool White** is selected as **Color Filter**)
- Split Screen
- Blanking
- Changing the **Display Background** setting in the **Extended** menu
- Changing the **Screen** setting in the **Extended** menu
- Changing the **Log Save Destination** setting in the **Extended** menu
- Using **Edge Blending** with **Effects** feature
- Detecting the input signal automatically

Also, you cannot use Epson Projector Professional Tool in Content Playback mode.

NFC Settings

☛ **Settings** > **NFC Settings**

You can prevent scanning to the projector's settings.

NFC Write Protection
Prevents anyone from scanning the projector's settings.

NFC Write Password
Set a password for scanning the projector's settings up to 32 alphanumeric characters long.



If you do not set an **NFC Write Password**, **NFC Write Protection** is enabled automatically when you turn on the projector. If you want to scan the projector's information using the NFC tag on the projector, set the **NFC Write Password** setting to **Off**.

Reset (Settings menu)

☛ **Settings** > **Reset**

You can reset all adjustment values on the **Settings** menu to their default settings, except for the following:

- Audio Out Device
- Power On Link
- Power Off Link
- Link Buffer
- User Button
- NFC Settings

Settings on the **Extended** menu let you customize various projector setup features.

Related Links

- "Home Screen" p.96
- "Menu Position" p.96
- "Message Position" p.97
- "Messages" p.97
- "Display Background" p.97
- "Startup Screen" p.97
- "Standby Confirmation" p.97
- "Screen" p.97
- "Panel Alignment" p.98
- "Color Uniformity" p.98
- "OSD Rotation" p.99
- "User's Logo" p.99
- "Projection" p.99
- "Direct Power On" p.99
- "Sleep Mode" p.99
- "Sleep Mode Timer" p.99
- "High Altitude Mode" p.100
- "Auto Source Search" p.100
- "Auto Power On" p.100
- "Startup Source" p.100
- "Quick Startup" p.100
- "USB Power" p.100
- "A/V Mute Settings" p.101
- "Shutter Settings" p.101
- "Remote Control Type" p.101
- "Beep" p.102
- "Indicators" p.102
- "Log Save Destination" p.102
- "Batch Setup Range" p.102
- "AC Voltage Monitoring" p.102
- "Date & Time" p.102
- "Lens Calibration" p.103
- "A/V Settings" p.103
- "Standby Mode" p.103
- "HDBaseT" p.103
- "Color Calibration" p.104
- "Projector ID" p.104
- "Projector Grouping" p.105
- "Tiling" p.105
- "Edge Blending" p.105
- "Black Level" p.106
- "Reset (Multi-Projection menu)" p.106
- "Screen Matching" p.107
- "Color Matching" p.107
- "Simple Stacking" p.108
- "Schedule Settings" p.109
- "Language" p.110
- "Reset (Extended menu)" p.110

Home Screen

☛ **Extended** > **Home Screen**

You can adjust settings on the Home screen.

Home Screen Auto Disp.

Set to **On** to display the Home screen automatically when there is no input signal when turning on the projector.

Custom Function 1/Custom Function 2

Select menu options to be assigned to the Home screen.

Menu Position

☛ **Extended** > **Display** > **Menu Position**

You can select the position of the projector menu displayed on the screen.

Message Position

☛ **Extended** > **Display** > **Message Position**

You can select the position of messages displayed on the screen.

Messages

☛ **Extended** > **Display** > **Messages**

You can control whether messages are displayed on the screen.

Display Background

☛ **Extended** > **Display** > **Display Background**

You can select the screen color or logo to display when no signal is received.

Setting is only displayed when **Content Playback** is set to **Off**.

Startup Screen

☛ **Extended** > **Display** > **Startup Screen**

You can control whether a special screen appears when the projector starts up.

This function is disabled when you turn on the projector in **Quick Startup** mode.

Standby Confirmation

☛ **Extended** > **Display** > **Standby Confirmation**

You can display a confirmation message after pressing the [Standby] button on the remote control.

When set to **Off**, you can turn off the projector simply by pressing the [Standby] button once.

Screen

☛ **Extended** > **Display** > **Screen**

You can set the aspect ratio and position of the projected image according to the type of screen being used.

Screen Type

Set the aspect ratio of the screen to fit the image into the projection area.

Screen Position

You can shift the image position horizontally and vertically if there are margins between the edge of the image and the projected screen frame due to the **Screen Type** setting.

- Adjust the aspect ratio for the projected image, if necessary.
- When the **Screen Type** setting changes, the **EDID** settings are automatically adjusted.
- Settings are only displayed when **Content Playback** is set to **Off**.
- This setting is unavailable when projecting images from a computer over a network.
- The **Screen Type** setting is not supported by the Message Broadcasting feature in the Epson Projector Management software.
- You cannot adjust the screen position if you set the **Screen Type** setting to the same aspect ratio as the projector resolution.

Panel Alignment

☛ **Extended** > **Display** > **Panel Alignment**

You can use the panel alignment feature to manually adjust the color convergence (the alignment of the red and blue colors) in the projected image. You can adjust the pixels horizontally and vertically in increments of 0.125 pixels within a range of ±3 pixels.

Panel Alignment
Set to **On** to correct color misalignment in the projected image.

Select Color
Select the color you want to adjust.

Pattern Color
Select the grid color displayed during adjustments.

- R/G/B to display the grid color in white.
- R/G to display the grid color in yellow.
- G/B to display the grid color in cyan.

The available color varies depending on the **Select Color** setting.

Start Adjustments
Starts the panel alignment process.

The image may become distorted while adjusting. The image is restored once adjustments are complete.

- **Shift the whole panel** to adjust the whole panel roughly.
- **Adjust the four corners** to adjust the four corners of the panel precisely. If you need to make additional adjustments, select **Select intersection and adjust** to adjust more precisely.

Reset
You can reset all adjustment values on the **Panel Alignment** menu to their default settings.

- Image quality may decline after performing alignment.
- Images for pixels that extend beyond the edge of the projected screen are not displayed.

Color Uniformity

☛ **Extended** > **Display** > **Color Uniformity**

☛ **Extended** > **Multi-Projection** > **Screen Matching** > **Color Uniformity**

You can use the color uniformity feature to manually adjust the color tone balance in the projected image.

Color Uniformity
Set to **On** to adjust the color tone balance for the whole screen.

Adjustment Level
Select the adjustment level you want to adjust.

There are eight adjustment levels, from white to gray to black. Adjust each level individually.

Set to **All** to adjust the tint for each color from level 2 to 8 in a batch. (Once the values of red, blue, or green are at maximum or minimum at any level, you cannot perform further adjustments.)

Start Adjustments
Starts adjustments for the selected adjustment level.

The image may become distorted while adjusting. The image is restored once adjustments are complete.

Adjust the outer areas first, and then adjust the entire screen.

Reset
You can reset all adjustment values on the **Color Uniformity** menu to their default settings.

The color tone may not be uniform even after adjusting the color uniformity.

OSD Rotation

☛ **Extended** > **Display** > **OSD Rotation**

You can rotate the menu display 90°.

User's Logo

☛ **Extended** > **User's Logo**

You can save an image on the projector and display it whenever the projector turns on. You can also display the image when the projector is not receiving an input signal. This image is called the user's logo screen.

You can select a photo, graphic, or company logo as the user's logo, which is useful in identifying the projector's owner to help deter theft. You can prevent changes to the user's logo by setting up password protection.

Display the image you want to project as the user's logo and then select this setting.

- If the **User's Logo Protection** setting in the **Password Protection** setting menu is set to **On**, set to **Off** before saving the user's logo.
- When you copy the menu settings from one projector to another using the batch setup feature, user's logo is also copied. Do not register the information that you do not want to share between multiple projectors as a user's logo.
- You cannot save content that is protected by HDCP.
- When **Content Playback** is set to **On**, you can display the user's logo only when the projector starts up.
- Adjustments for image shape and display range are temporarily canceled when you select **User's Logo**.

Projection

☛ **Extended** > **Projection**

You can set the way the projector faces the screen so the image is oriented correctly.

You can change the projection mode to flip the image over top-to-bottom by holding down the [A/V Mute] button on the remote control for approximately 5 seconds.

Direct Power On

☛ **Extended** > **Operation** > **Direct Power On**

Set to **On** to turn on the projector by plugging it in without pressing the power button.

Note that the projector also turns on automatically in cases such as recovery from a power outage.

Sleep Mode

☛ **Extended** > **Operation** > **Sleep Mode**

Set to **On** to automatically turns off the projector after an interval of inactivity.

Sleep Mode Timer

☛ **Extended** > **Operation** > **Sleep Mode Timer**

You can set the time before the projector automatically turns off from 1 to 30 minutes.

This function is enabled only when **Sleep Mode** is set to **On**.

High Altitude Mode

☛ **Extended** > **Operation** > **High Altitude Mode**

When operating the projector at an altitude where the air is thin, the normal rotation speed of the fans is not enough to cool the projector.

Set to **On** to increase the rotation speed of the fans at altitudes above 1500 m.

When set to **On**, the projector's operating temperature will rise.

Auto Source Search

☛ **Extended** > **Operation** > **Auto Source Search**

Set to **On** to detect the input signal automatically and project images when there is no input signal.

- Setting is only displayed when **Content Playback** is set to **Off**.
- This function is disabled when you turn on the projector in the **Quick Startup** mode.

Auto Power On

☛ **Extended** > **Operation** > **Auto Power On**

Computer

Select to automatically turn on the projector when it detects an input signal from the image source.

HDMI

Select to automatically turn on the projector when it detects an HDMI video signal.

This is useful for video meetings using Microsoft Teams Rooms. The projector turns on automatically when it receives an HDMI video signal from a device that supports Microsoft Teams Rooms and you can start the meeting immediately.

Startup Source

☛ **Extended** > **Operation** > **Startup Source**

You can select the image source you want to project when the projector is turned on in Content Playback mode.

Quick Startup

☛ **Extended** > **Operation** > **Quick Startup**

You can set the time period for Quick Startup mode. The projector enters this mode when you turn it off. You can start projecting in approximately 7 seconds by pressing the power button.

- Set **A/V Output** to **While Projecting** first.
- Available only when **Auto Power On** is set to **Off** or **Computer**.

USB Power

☛ **Extended** > **Operation** > **USB Power**

Set to **Always On** to continue supplying power to the streaming media player when the projector is not projecting images. This lets the streaming media player start earlier, or perform its firmware updates automatically over a network if necessary.

- Set **A/V Output** to **While Projecting** first.
- Available only when **Auto Power On** is set to **Off** or **Computer**.

A/V Mute Settings

☛ **Extended** > **Operation** > **A/V Mute Settings**

You can adjust the A/V Mute settings (EB-PU2120W).

Fade-in
Set the number of seconds for a fade-in transition effect when displaying an image.

Fade-out
Set the number of seconds for a fade-out transition effect when hiding an image.

A/V Mute Timer
Turns off the projector automatically if **A/V Mute** is enabled and 2 hours of inactivity has passed.

Release A/V Mute
Select **A/V Mute** if you want to use only the [A/V Mute] button to turn off A/V mute or if you want to send a command to turn off A/V Mute, or select **Any Button** to use any button to turn it off.

Shutter Settings

☛ **Extended** > **Operation** > **Shutter Settings**

You can adjust the shutter settings (EB-PU2220B).

Fade-in
Set the number of seconds for a fade-in transition effect when displaying an image.

Fade-out
Set the number of seconds for a fade-out transition effect when hiding an image.

Shutter Timer
Turns off the projector automatically if the shutter is enabled and two hours of inactivity have passed.

Shutter Release
Select **Shutter** to turn off the shutter function by using the [A/V Mute] button only or by sending a command to turn off the shutter. Select **Any Button** to use any button to turn off the shutter function.

Startup
Sets the shutter status when the projector is turned on.

Standby
Sets the shutter status when the projector is turned off. Select **Last Used** if you want to maintain the current shutter status when the projector is turned off.

Remote Control Type

☛ **Extended** > **Operation** > **Advanced** > **Remote Control Type**

If you want to adjust the zoom/focus/distortion of the projected image using the Epson remote control as shown below, select **Advanced** as the **Remote Control Type** setting.

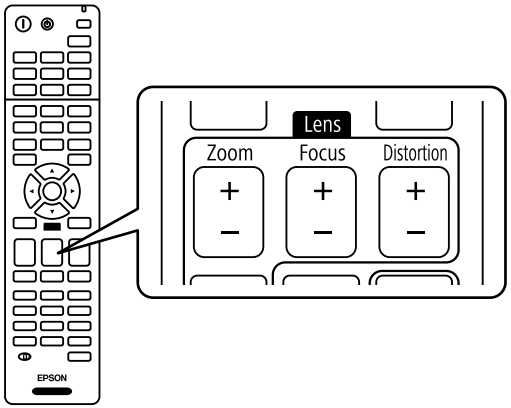

Beep

☛ **Extended** > **Operation** > **Advanced** > **Beep**

You can control the beep that sounds when you turn the projector on or off.

Indicators

☛ **Extended** > **Operation** > **Advanced** > **Indicators**

Set to **Off** to turn off the indicator lights on the projector except when an error or warning occurs.

Log Save Destination

☛ **Extended** > **Operation** > **Advanced** > **Log Save Destination**

You can set where you want to save the operation logs for the projector.

Select **USB and Internal Memory** to save logs as text files (.log) to a USB flash drive inserted into the projector's USB-A port.

Setting is only displayed when **Content Playback** is set to **Off**.

Batch Setup Range

☛ **Extended** > **Operation** > **Advanced** > **Batch Setup Range**

You can select which menu settings you want copied.

All

Select this to copy all of the projector menu settings using the batch setup feature.

Limited

Select this if you do not want to copy the **Password Protection**, **EDID**, and **Network** menu settings.

AC Voltage Monitoring

☛ **Extended** > **Operation** > **Advanced** > **AC Voltage Monitoring**

Set to **On** to monitor the projector's voltage status and obtain a log when a warning, disconnection, or power blockage occurs.

If you regularly turn off the projector by turning off the power outlet (direct shutdown), set to **Off**.

You can view the log in the projector's **Info** menu.

☛ **Info** > **Voltage Warning Info**

Date & Time

☛ **Extended** > **Operation** > **Date & Time**

You can adjust the projector's system time and date settings.

Daylight Saving Time
Adjust the daylight saving time settings for your region.

Internet Time
Turn on this setting to update the date and time automatically through an Internet time server.

When you set **Schedule Protection** to **On** in the **Password Protection** screen, you cannot change the time and date settings. Set **Schedule Protection** to **Off** first.

Lens Calibration

☛ **Extended** > **Operation** > **Lens Calibration**

You can view information about the lens currently in use.

It takes up to approximately 100 seconds. When calibration is finished, the lens returns to the same position it was in before calibration.

The following lenses return to the standard position.

- ELPLX02S/02
- ELPLX02WS/02W

A/V Settings

☛ **Extended** > **A/V Settings**

You can select to output audio and video to an external device when the projector is in standby mode (when the power is off).

Select **Always On** to output audio and images to external devices when the projector does not project any images.

- Available only when **Quick Startup** is set to **Off**, and **Auto Power On** is set to **Off** or **Computer**.
- When set to **Always On**, you can move the lens position to the home position even if the projector is in standby mode.

Standby Mode

☛ **Extended** > **Standby Mode**

Set to **Communication On** to monitor and control the projector over a network.

- Set **A/V Output** to **While Projecting** first.
- Available only when **Auto Power On** is set to **Off** or **Computer**.
- Available only when **USB Power** is set to **On While Projecting**.

HDBaseT

☛ **Extended** > **HDBaseT**

You can select the communication settings for connections to an HDBaseT transmitter or switcher.

Control Communications
You can enable or disable communication from the Ethernet and serial ports on the HDBaseT transmitter or switcher; set to **On** to disable the projector's LAN, RS-232C, and Remote ports.

Extron XTP
Set to **On** when you connect an Extron XTP transmitter or switcher to the HDBaseT ports. See the following Extron Web site for more details on the XTP system.

http://www.extron.com/

- **Control Communications** is only displayed when **Extron XTP** is set to **Off**.
- When **Extron XTP** is set to **On**, the cooling fans may run even in standby status. This is not a malfunction.
- When **A/V Settings** is set to **Always On**, and **Control Communication** is set to **On**, communication from the HDBaseT port is enabled even if the projector is in standby mode.

Color Calibration

☛ **Extended** > **Color Calibration**

The color calibration process adjusts the color balance and brightness that has deteriorated over time based on images taken by the optional external camera, and restores the default image quality.

Color Calibration
Set to **On** to enable the color calibration process.

Start Auto Adjustment
Starts auto adjustment.

Undo
You can undo auto adjustment.

Redo
Select after selecting **Undo** to restore the image to the status after auto adjustment.

Color Uniformity
You can adjust the color tone balance for the whole image.

Reset
You can reset all adjustment values on the **Color Calibration** menu to their default settings.

This function is not available when you use the following optional lenses:

- ELPLL08
- ELPLX02/ELPLX02W

Related Links

- "Conditions for Color Calibration" p.104

Conditions for Color Calibration

You can use the color calibration feature under the following conditions:

- The optional external camera is installed on each projector.
- You are projecting on a matte white diffusion screen that is flat and even.
- The projector is placed so it squarely faces the screen, not at an angle.
- Nothing is blocking the optional external camera and the projected image.
- More than 20 minutes have passed after turning on the projector.
- Projection size is between 80 to 200 inches.

Projector ID

☛ **Extended** > **Multi-Projection** > **Projector ID**

You can set the projector to a particular ID number which allows you to use a remote control to individually control projectors. This is useful when you want to control multiple projectors using one remote control.

- You need to set the remote control's ID to match the projector's ID to operate only a particular projector.

  To set the remote control's ID, set the remote control [ID] switch to **On**. Press the [ID] button on the remote control and press the numeric button that matches the projector's ID within 5 seconds. (Enter a one-digit or two-digit number.)
- If you do not know the projector's ID, press the [ID] button during projection to temporarily display the projector's ID and the remote control's ID on the screen. (This is only available when you use the remote control that comes with this projector.)
- You can set up to 30 IDs.

Projector Grouping

☛ **Extended** > **Multi-Projection** > **Projector Grouping**

You can create a group of projectors that you can control simultaneously.

Tiling

☛ **Extended** > **Multi-Projection** > **Tiling**

You can project the same image from up to 15 projectors to create one large image using the Tiling feature.

Tiling

When the optional external camera is installed, set to **Auto** to configure tiling automatically.

If you do not install the optional external camera or tiling the images automatically was unsuccessful, select **Manual**, and then select the **Layout** and **Location Setup** settings individually.

Layout

Select the number of rows and columns you are setting up.

Location Setup

Select the position of each projected image as follows:

- **Row Order** to layout the screens from top to bottom, starting with 1 at the top, in sequential order.
- **Column Order** to layout the screens from left to right, starting with A on the left, in alphabetical order.

Location Info

You can view the name, IP address, and ID of the projector you set.

- Make sure nothing is blocking the optional external camera while performing automatic tiling.
- Do not change any of the projector names or IP addresses, or the images will not be adjusted automatically.
- The auto tiling function is not available when you use the following optional lenses:
  - ELPLL08
  - ELPLX02/ELPLX02W

Related Links

• "Tiling Using the Projector's Menu" p.131

Edge Blending

☛ **Extended** > **Multi-Projection** > **Edge Blending**

You can blend the border between multiple images to create a seamless screen.

Edge Blending

Set to **Blending/Black Level** or **Black Level** to enable the Edge Blending feature.

Top Edge/Bottom Edge/Right Edge/Left Edge

Select the edge you want to blend on each projector.

- **Blending** to turn on the Edge Blending feature for the selected edge. Gradation is applied to the blending range.
- **Blend Start Position** to adjust the point where edge blending begins in 1 pixel increments. The blending start position is displayed with a red line.
- **Blend Range** to select the width of the blended area in 1 pixel increments. You can select up to 45% of the projector's resolution.
- **Blend Curve** to select a gradient for the shaded area on the projected image.

Line Guide
Set to **On** to display a guide on the blended area.

Pattern Guide
Set to **On** to display a grid to match the blended area.

Guide Color
Select a combination of guide colors.

- **Blend Start Position**, **Blend Range**, **Blend Curve**, **Line Guide**, **Pattern Guide**, and **Guide Color** are only available when **Edge Blending** is set to **Blending/Black Level**.
- Set the **Color Mode** setting to **Multi-Projection** in the projector's **Image** menu for all of the projectors.
- When you adjust the blending area using another device such as a media server, select **Black Level**.

Black Level

☛ **Extended** > **Multi-Projection** > **Black Level**

☛ **Extended** > **Multi-Projection** > **Screen Matching** > **Black Level**

You can adjust the brightness and tone differences in overlapping images.

Color Adjustment
You can adjust the brightness and tone of the areas. The adjustment areas are displayed based on the **Edge Blending** setting.

When multiple screens are overlapping, adjust overlapping areas starting with the brightest areas first. Adjust the non-overlapping area (darkest part) last.

Area Correction
If the tone for some areas does not match, you can adjust it individually.

Reset
You can reset all adjustment values on the **Black Level** menu to their default settings.

- The Black Level feature is only available when the following conditions are met in the **Edge Blending** settings.
  - When **Edge Blending** is set to anything except for **Off**
  - When at least one of **Top Edge**, **Bottom Edge**, **Left Edge**, and **Right Edge** are set to **On**
- You cannot adjust the **Black Level** setting when a test pattern is displayed.
- If the **Geometry Correction** value is very large, you may not be able to adjust the **Black Level** correctly.
- The brightness and tone may differ in areas where the images overlap as well as in other areas even after performing **Black Level** adjustment.
- If you change one of **Top Edge**, **Bottom Edge**, **Left Edge**, and **Right Edge**, the **Black Level** setting returns to its default value.

Reset (Multi-Projection menu)

☛ **Extended** > **Multi-Projection** > **Reset**

You can reset all adjustment values on the **Multi-Projection** menu to their default settings.

Screen Matching

☛ **Extended** > **Multi-Projection** > **Screen Matching**

You can adjust the tint, brightness, black level, and blend curve of multiple projectors so that they match better.

If your projectors are on a network, the brightness and tint for multiple projectors are corrected automatically based on the darkest projector.

If your projectors are not on a network or automatic adjustment was unsuccessful, you can adjust the tint and brightness of multiple projectors manually.

- The auto adjustment feature is only available under the following conditions.
  - When you set the position of each image using **Location Setup** in the **Tiling** menu
  - When **Color Calibration** is set to **On**
- You can undo or redo the screen matching procedure only when **Light Source Mode** is set to **Custom**.
- The required time for screen matching varies depending on the projector layout. It takes up to approximately 18 minutes.
- This function is not available when you use the following optional lenses:
  - ELPLL08
  - ELPLX02/ELPLX02W

Related Links

- "Conditions for Screen Matching" p.107

Conditions for Screen Matching

You can use the screen matching feature under the following conditions:

- All of the projectors are the same model and the optional external camera is installed on each projector.
- You are projecting on a matte white diffusion screen that is flat and even.
- The projector is placed so it squarely faces the screen, not at an angle.
- Nothing is blocking the optional external camera and the projected image.
- More than 20 minutes have passed after turning on the projector.
- The projectors to be adjusted are grouped.
- The projected images do not overlap or have gaps between them, and create a rectangular image after tiling.
- Projection size is between 80 to 200 inches.
- All the projectors are connected to the same network and project images with the same resolution.
- The Blend Range setting is set between 15 to 45%.
- **Projection** in the projector's **Extended** menu is set to **Front** or **Front/Ceiling** for all projectors.

Color Matching

☛ **Extended** > **Multi-Projection** > **Screen Matching** > **Color Matching**

You can adjust the tint and brightness for the color tone from white to black. During color matching, half of the overlapped area is displayed in black so that you can check the edge of the image easily.

Adjustment Level

Select the adjustment level you want to adjust.

There are eight adjustment levels, from white to gray to black. Adjust each level individually.

Set to **All** to adjust the tint for each color from level 2 to 8 in a batch. (Once the values of red, blue, or green are at maximum or minimum at any level, you cannot perform further adjustments.)

Red/Green/Blue
You can adjust the tone for each color.

Brightness
You can adjust the image brightness.

Simple Stacking

☛ **Extended** > **Multi-Projection** > **Simple Stacking**

You can easily create a bright projected image by overlapping the images of two projectors connected by wired LAN.

Point Correction
Adjust the image shape of the master projector. Select **Quick Corner** to correct it roughly, and then select **Point Correction** to correct it in detail.

Start Auto Adjustment
You can automatically adjust the projected image using the external camera.

The projector on which you perform this feature becomes the master projector, and the images from other projectors are overlapped based on the master projector's image.

- Connect two projectors directly using a LAN cable.
- Make sure you do the following before adjusting:
  - Set the **DHCP** setting to **On** in the projector's **Network** menu for two projectors.
    ☛ **Network** > **Network Configuration** > **Wired LAN** > **IP Settings**
  - Adjust the image position, shape, and focus on the master projector. If you adjust the image shape of the master projector, use the **Point Correction** menu in the **Simple Stacking** setting.
  - The required time for simple stacking varies depending on the projector layout. It takes up to approximately 5 minutes.
  - After completing the simple stacking process, **Display Background** is automatically set to **Black**.
    ☛ **Extended** > **Display** > **Display Background**
- This function is not available when you use the following optional lenses:
  - ELPLL08
  - ELPLX02/ELPLX02W

Related Links
- "Conditions for Simple Stacking" p.108
- "Geometry Correction" p.85
- "Stacking Using the Projector's Menu" p.136

Conditions for Simple Stacking

You can use the simple stacking feature under the following conditions:

- An optional external camera or a built-in camera is installed on each projector.
- Wait for 2 minutes after turning on two projectors before starting the simple stacking process.
- You are projecting on a matte white diffusion screen that is flat and even.

- The projector is placed so it squarely faces the screen, not at an angle.
- Nothing is blocking the optional external camera and the projected image.
- The illuminance ratio on the screen surface when projecting an all-white screen and when projecting an all-black screen is 8:1 or more. (When the screen illuminance is 40 lux or less, the projection size within the following range is recommended.)
  - Up to 9.9 Klm: 50 to 200 inches
  - 10 Klm to 14.9 Klm: 60 to 300 inches
  - 15 Klm to 19.9 Klm: 70 to 350 inches
  - 20 Klm to 24.9 Klm: 80 to 400 inches
  - 25 Klm to 29.9 Klm: 90 to 450 inches
  - 30 Klm or more: 100 to 500 inches
- The original resolution of all the projector is same.
- **Projection** in the projector's **Extended** menu is set to **Front** or **Front/Ceiling** for all projectors.

Schedule Settings

☛ **Extended** > **Schedule Settings**

☛ **Extended** > **Multi-Projection** > **Screen Matching** > **Schedule Settings**

You can schedule various projector tasks.

Schedule/Extended Schedule

Select **Add New** to schedule events. To save your events, select **Setup complete** and then select **Yes**.

- **Event Settings** to select the event details you want to perform. Select **No Change** for items that you do not want to change when the event occurs.
- **Date / Time Settings** to select the date and time at which you want the event to occur. You can schedule events up to 4 weeks later.

Schedule Reset

You can delete all scheduled events. To delete events completely, you need to select **Setup complete** and select **Yes**.

Setup complete

Saves your changes in the **Schedule Settings** menu.

⚠ Warning

Do not place flammable objects in front of the lens. If you schedule the projector to turn on automatically, flammable objects in front of the lens could catch on a fire.

- In the **Schedule** menu, you can schedule up to 30 events.
- In the **Extended Schedule** menu, you can schedule only one event for **Color Calibration** or **Screen Matching**.
- Light Source Calibration events do not start if the projector is used continuously for more than 24 hours, or regularly turned off by turning off the power outlet. Set the following events:
  - Turning on the projector 20 minutes before performing light source calibration.
  - Performing light source calibration periodically.

Related Links

- "Schedule Status Icons" p.109

Schedule Status Icons

The icons in the calender are described in the following table.

	Valid schedule
	Regular schedule

	Invalid schedule
	One time schedule
	Regular schedule
	Standby schedule (turns communication on or off during standby)
	Invalid schedule

Language

☛ **Extended** > **Language**

You can select the language for projector menu and message displays.

Reset (Extended menu)

☛ **Extended** > **Reset**

You can reset all adjustment values on the **Extended** menu to their default settings, except for the following:

- Screen
- Projection
- High Altitude Mode
- Auto Source Search
- USB Power
- Release A/V Mute (EB-PU2120W)
- Shutter Release (EB-PU2220B)
- A/V Settings
- Standby Mode
- HDBaseT
- Projector ID
- Language
- Point Correction (in the Simple Stacking menu)

When you set **User's Logo Protection** to **On** in the **Password Protection** screen, you cannot change the following settings related to user's logo display. Set **User's Logo Protection** to **Off** first.

- Display Background
- Startup Screen

Settings on the **Network** menu let you view network information and set up the projector for controlling over a network.

When you set **Network Protection** to **On** from the **Password Protection** screen, you cannot change the network settings. Hold down the [Freeze] button for more than 5 seconds to turn off the **Network Protection** setting.

If no **Web Control Password** has been set, a screen prompting you to set a password is displayed before you can save the settings. Follow the on-screen instructions to set the password.

Related Links

- "Wireless Mode" p.111
- "Net. Info. - Wireless LAN" p.112
- "Net. Info. - Wired LAN" p.112
- "Display the QR Code" p.112
- "Remote Camera Access" p.112
- "Projector Name" p.112
- "PJLink Password" p.112
- "Remote Password" p.112
- "Web Control Password" p.113
- "Moderator Password" p.113
- "Projector Keyword" p.113
- "Display Keyword" p.113
- "Display LAN Info." p.113
- "Connection Mode" p.113
- "Search Access Point" p.113
- "SSID" p.114
- "Security" p.114
- "Passphrase" p.114
- "EAP Method" p.115
- "Channel" p.115
- "IP Settings" p.115
- "SSID Display" p.116
- "IP Address Display" p.116
- "IPv6 Settings" p.116
- "Mail Notification" p.116
- "SMTP Server" p.117
- "Port Number" p.117
- "From" p.117
- "Address 1 Setting/Address 2 Setting/Address 3 Setting" p.117
- "SNMP" p.117
- "Trap IP Address 1/Trap IP Address 2" p.118
- "Community Name" p.118
- "PJLink Notification" p.118
- "Notified IP Address" p.118
- "Command Communication" p.118
- "Secure HTTP" p.118
- "Web Server Certificate" p.118
- "Web API Settings" p.119
- "Priority Gateway" p.119
- "Basic Control" p.119
- "PJLink" p.119
- "AMX Device Discovery" p.119
- "Crestron Connected" p.119
- "Art-Net" p.119
- "Message Broadcasting" p.120
- "Reset (Network menu)" p.120

Wireless Mode

☛ **Network** > **Wireless Mode**

You can configure your wireless LAN settings.

Set to **Wireless LAN On** to project images via a wireless LAN. If you do not want to connect via wireless LAN, set to **Off** to prevent unauthorized access by others.

To connect the projector to the computer using a wireless network system, install the optional wireless LAN module.

Net. Info. - Wireless LAN

☛ **Network** > **Net. Info. - Wireless LAN**

You can view wireless network status and details.

Net. Info. - Wired LAN

☛ **Network** > **Net. Info. - Wired LAN**

You can view wired network status and details.

Display the QR Code

☛ **Network** > **Display the QR Code**

You can view a QR code for connecting with iOS or Android devices using the Epson iProjection app.

Remote Camera Access

☛ **Network** > **Remote Camera Access**

You can display the image taken by the optional external camera using Epson Web Control.

Remote Camera Access

Set to **On** to enable the Remote Camera Access function.

This function is not available when you use the following optional lenses:

- ELPLL08

Projector Name

☛ **Network** > **Network Configuration** > **Basic** > **Projector Name**

This is useful to identify the projector over the network.

Enter a name up to 16 alphanumeric characters long. (Do not use " * + , / : ; < = > ? [\ ] ` | spaces.)

PJLink Password

☛ **Network** > **Network Configuration** > **Basic** > **PJLink Password**

This is useful for projector control using the PJLink protocol.

Enter a password up to 32 alphanumeric characters long. (Do not use spaces and any symbols.)

Remote Password

☛ **Network** > **Network Configuration** > **Basic** > **Remote Password**

This is useful for accessing the projector using the Web Remote.

- User name: **EPSONREMOTE**
- Password: No password is set by default.

Enter a password from 8 to 32 alphanumeric characters long. (Do not use * : spaces.)

Setting is only displayed when **Content Playback** is set to **Off**.

Web Control Password

☛ **Network** > **Network Configuration** > **Basic** > **Web Control Password**

This is useful for accessing the projector over the Web.

- User name: **EPSONWEB**
- Password: No password is set by default.

Enter a password from 8 to 32 alphanumeric characters long. (Do not use * : spaces.)

Moderator Password

☛ **Network** > **Network Configuration** > **Basic** > **Moderator Password**

This is useful for accessing the projector as a moderator using Epson iProjection. (No password is set by default.)

Enter a four-digit number password.

Projector Keyword

☛ **Network** > **Network Configuration** > **Basic** > **Projector Keyword**

You can turn on a security password to prevent access to the projector by anyone not in the room with it.

You must enter a displayed, randomized keyword from a computer using Epson iProjection to access the projector and share the current screen.

Display Keyword

☛ **Network** > **Network Configuration** > **Basic** > **Display Keyword**

You can select whether to display a projector keyword on the projected image when accessing the projector using Epson iProjection.



Available when **Projector Keyword** is set to **On**.

Display LAN Info.

☛ **Network** > **Network Configuration** > **Basic** > **Display LAN Info.**

You can select the display format for the projector's network information.

By simply reading the QR code with Epson iProjection, you can connect the mobile device to the projector through a network. The default value is **Text & QR Code**.

Connection Mode

☛ **Network** > **Network Configuration** > **Wireless LAN** > **Connection Mode**

You can select the type of wireless connection.

Quick

You can connect to multiple smartphones, tablets, or computers directly using wireless communication.

When you select this connection mode, the projector acts as an easy access point. (We recommend limiting the number of devices to six or less to maintain the projection performance.)

Advanced

You can connect to multiple smartphones, tablets, or computers over a wireless network access point. The connection is established in infrastructure mode.

Search Access Point

☛ **Network** > **Network Configuration** > **Wireless LAN** > **Search Access Point**

You can search for available wireless network access points in Advanced connection mode. Depending on the access point settings, they may not be displayed in the list.

- A blue mark appears for access points that have already been set.
- A lock icon appears for access points for which security has been set. If you select an access point for which security has been set, the **Security** menu is displayed. Select the type of security according to the security settings for the access point.

SSID

☛ **Network** > **Network Configuration** > **Wireless LAN** > **SSID**

You can set the SSID (network name) of the wireless LAN system the projector is connecting to.

Security

☛ **Network** > **Network Configuration** > **Wireless LAN** > **Security**

You can set up security for your projector to use on a wireless network.

Open
Security is not set.

WPA2-PSK
Communication is performed using WPA2 security. Uses AES method for encryption. When establishing a connection from a computer to the projector, enter the value set in the passphrase.

WPA3-PSK
Connects in WPA3 personal mode. Communication is performed using WPA3 security. Uses AES method for encryption. When establishing a connection from a computer to the projector, enter the value set in the passphrase.

WPA2/WPA3-PSK
Connects in WPA2/WPA3 personal mode. Encryption method is selected automatically according to the access point settings. Set a passphrase which is the same for the access point.

WPA3-EAP
Connects in WPA3 enterprise mode. Encryption method is selected automatically according to the access point settings.

WPA2/WPA3-EAP
Connects in WPA2/WPA3 enterprise mode. Encryption method is selected automatically according to the access point settings.

- WPA2-PSK is available only for Quick connection mode.
- WPA3-PSK, WPA2/WPA3-PSK, WPA3-EAP, and WPA2/WPA3-EAP are available only for Advanced connection mode.
- When the **Mail Notification** is set to **Off**, you cannot set security.
- WPA is an encryption standard that improves the security for wireless networks. The projector supports TKIP and AES encryption methods. WPA also includes user authentication functions. WPA authentication provides two methods: using an authentication server, or authenticating between a computer and an access point without using a server. This projector supports the latter method, without a server.
- When setting security, follow the instructions from the administrator of the network system you want to connect to.

Passphrase

☛ **Network** > **Network Configuration** > **Wireless LAN** > **Passphrase**

For **WPA2-PSK**, **WPA3-PSK**, and **WPA2/WPA3-PSK** security, enter the pre-shared passphrase used on the network. You can enter various passphrases from 8 to 63 alphanumeric characters long.

When the passphrase is entered and the [Enter] button is pressed, the value is set and displayed as an asterisk (*).

We recommend changing the passphrase periodically for security. If the network settings are initialized, it returns to the initial passphrase.

- You can enter up to 32 characters in the projector's menu. To enter more than 32 characters, use your Web browser.
- When **Connection Mode** is set to **Quick**, if no passphrase has been set, a screen prompting you to set a passphrase is displayed. Follow the on-screen instructions to set the passphrase.

EAP Method

☛ **Network** > **Network Configuration** > **Wireless LAN** > **EAP Method**

You can set the EAP settings for **WPA3-EAP** and **WPA2/WPA3-EAP** security.

EAP Type

Select the protocol for authentication.

PEAP

Authentication protocol widely used in Windows Server.

PEAP-TLS

Authentication protocol used in Windows Server. Select this when using a client certificate.

EAP-TLS

Authentication protocol widely used to use a client certificate.

EAP-FAST

Select this when these authentication protocols are used.

User name

Enter a user name for the network up to 64 alphanumeric characters long. To include a domain name, add it before the backslash and the user name (domain\username).

When importing a client certificate, the name the certificate was issued to is automatically set.

Password

Enter a password for authentication up to 64 alphanumeric characters long. After you enter the password and select **Finish**, the password is displayed as an asterisk (*).

Client Certificate

Import the client certificate.

Verify Server Certificate

You can verify the server certificate when a CA certificate has been set.

CA certificate

Imports the CA certificate.

RADIUS Server Name

Enter the server name to verify up to 32 alphanumeric characters long.

- You can enter up to 32 alphanumeric characters long in the projector menu. To enter more than 32 characters, use your Web browser.
- **Password** is only displayed when **EAP Type** is set to **PEAP** or **EAP-FAST**.
- **Client Certificate** is only displayed when **EAP Type** is set to **PEAP-TLS** or **EAP-TLS**.

Channel

☛ **Network** > **Network Configuration** > **Wireless LAN** > **Channel**

Set the frequency band (channel) using in Quick connection mode.

If interference from other signals occurs, use a different channel.

IP Settings

☛ **Network** > **Network Configuration** > **Wireless LAN** > **IP Settings**

☛ **Network** > **Network Configuration** > **Wired LAN** > **IP Settings**

Set **DHCP** to **On** if your network assigns addresses automatically.

Set to **Off** to manually enter the network's **IP Address**, **Subnet Mask**, and **Gateway Address** using 0 to 255 for each address field.

Do not use these addresses:

- for the IP Address: 0.0.0.0, 127.x.x.x, 192.0.2.x, or 224.0.0.0 through 255.255.255.255
- for the Subnet Mask: 255.255.255.255 or 0.0.0.0 through 254.255.255.255
- for the Gateway Address: 0.0.0.0, 127.x.x.x, or 224.0.0.0 through 255.255.255.255

(where x is a number from 0 to 255)

SSID Display

☛ **Network** > **Network Configuration** > **Wireless LAN** > **SSID Display**

You can select whether to display the SSID on the network standby screen and Home screen.

IP Address Display

☛ **Network** > **Network Configuration** > **Wireless LAN** > **IP Address Display**

☛ **Network** > **Network Configuration** > **Wired LAN** > **IP Address Display**

You can select whether to display the IP address on the network standby screen and Home screen.

IPv6 Settings

☛ **Network** > **Network Configuration** > **Wireless LAN** > **IPv6 Settings**

☛ **Network** > **Network Configuration** > **Wired LAN** > **IPv6 Settings**

You can select IPv6 settings when you connect the projector to the network using IPv6.

IPv6

Set to **On** to connect the projector to the network using IPv6.

One local link address is always set while using IPv6. This is composed of the interface ID created from fe80:: and the projector's MAC address.

IPv6 is supported to monitor and control the projector over a network using Epson Web Control and PJLink.

Auto Configuration

Set to **On** to assign addresses automatically according to the Router Advertisement.

The address is composed as shown below.

Stateless Address (0 to 6)

Created automatically by combining the prefix acquired from the RA (Router Advertisement) and the interface ID created from the projector's MAC address.

Stateful Address (0 to 1)

Created automatically from the DHCP server using DHCPv6.

Use Temporary Address

Set to **On** if you want to use a temporary IPv6 address.



You can set the IPv6 address manually in the **Advanced** menu in Epson Web Control.

Mail Notification

☛ **Network** > **Network Configuration** > **Notifications** > **Mail Notification**

Set to **On** to send an email to the preset addresses when a problem or warning occurs with a projector.

Related Links

• "Network Projector E-mail Alert Messages" p.117

Network Projector E-mail Alert Messages

When a problem occurs with a projector on the network, and you selected to receive e-mail alerts, you receive an e-mail containing the following information:

- The email address set in **From** as the mail sender
- **Epson Projector** in the subject line
- The name of the projector experiencing a problem
- The IP address of the affected projector
- Detailed information about the problem

SMTP Server

☛ **Network** > **Network Configuration** > **Notifications** > **SMTP Server**

Enter the IP address for the projector's SMTP server using 0 to 255 for each address field.

Do not use these addresses: 127.x.x.x, 192.0.2.x or 224.0.0.0 through 255.255.255.255 (where x is a number from 0 to 255).

Port Number

☛ **Network** > **Network Configuration** > **Notifications** > **Port Number**

Enter a number for the SMTP server Port Number from 1 to 65535 (default is 25).

From

☛ **Network** > **Network Configuration** > **Notifications** > **From**

Enter the e-mail address of the sender up to 64 alphanumeric characters long. (Do not use " ( ) , : ; < > [\] spaces.)

- You can enter up to 32 alphanumeric characters long in the projector menu. To enter more than 32 characters, use your Web browser.
- Enter an email address that does not contain personal information.

Address 1 Setting/Address 2 Setting/Address 3 Setting

☛ **Network** > **Network Configuration** > **Notifications** > **Address 1 Setting**

☛ **Network** > **Network Configuration** > **Notifications** > **Address 2 Setting**

☛ **Network** > **Network Configuration** > **Notifications** > **Address 3 Setting**

Enter the e-mail address to receive notifications up to 64 alphanumeric characters long. (Do not use " ( ) , : ; < > [\] spaces.) And select the alerts you want to receive.

- You can enter up to 32 alphanumeric characters long in the projector menu. To enter more than 32 characters, use your Web browser.
- Enter an email address that does not contain personal information.

SNMP

☛ **Network** > **Network Configuration** > **Notifications** > **SNMP**

Set to **On** to monitor the projector using SNMP. To monitor the projector, you need to install the SNMP manager program on your computer. SNMP should be managed by a network administrator.

Trap IP Address 1/Trap IP Address 2

☛ **Network** > **Network Configuration** > **Notifications** > **Trap IP Address 1**

☛ **Network** > **Network Configuration** > **Notifications** > **Trap IP Address 2**

Enter up to two IP addresses to receive SNMP notifications, using 0 to 255 for each address field.

Do not use these addresses: 127.x.x.x or 224.0.0.0 through 255.255.255.255 (where x is a number from 0 to 255).

Community Name

☛ **Network** > **Network Configuration** > **Notifications** > **Community Name**

Enter the SNMP community name up to 32 alphanumeric characters long. (Do not use spaces and any symbols other than @.)

PJLink Notification

☛ **Network** > **Network Configuration** > **Notifications** > **PJLink Notification**

Set to **On** to enable the PJLink notification function when the PJLink setting is enabled.

Notified IP Address

☛ **Network** > **Network Configuration** > **Notifications** > **Notified IP Address**

Enter the IP address to receive the projector's operating status when the PJLink notification function is enabled. Enter the addresses using 0 to 255 for each address field.

Do not use these addresses: 127.x.x.x or 224.0.0.0 through 255.255.255.255 (where x is a number from 0 to 255).

Command Communication

☛ **Network** > **Network Configuration** > **Others** > **Command Communication**

You can select the authentication method for command communication.

Protected

Select when performing a digest authentication using **Web Control Password**. You need to install the latest version of the Epson Projector Management software.

Compatible

Select when performing plain text authentication using the Monitor Password (up to 16 alphanumeric characters long).



Select **Compatible** when monitoring projectors with a switcher and a system controller or using Epson Projector Management ver.5.30 or earlier.

Secure HTTP

☛ **Network** > **Network Configuration** > **Others** > **Secure HTTP**

To strengthen security, communication between the projector and computer in Web control is encrypted. When setting security with Web control, it is recommended to set this to **On**.

Web Server Certificate

☛ **Network** > **Network Configuration** > **Others** > **Web Server Certificate**

Imports the Web server certificate for secure HTTP.

Web API Settings

☛ **Network** > **Network Configuration** > **Others** > **Web API Settings**

You can select the Web API settings when using Web API communications.

Web API

Set to **On** to enable the Web API function.

Authentication

You can set the security for your projector to use during Web API communications.

Open

Security is not set.

Digest

Communication is performed using API authentication (Digest authentication).



See the *Web API Specifications for Projectors* for details.

Priority Gateway

☛ **Network** > **Network Configuration** > **Others** > **Priority Gateway**

You can set the priority gateway.

Basic Control

☛ **Network** > **Network Configuration** > **Others** > **Basic Control**

Set to **On** to control the projector remotely by using Basic Control.

You must set a Remote Password the first time you turn on this setting.



Setting is only displayed when **Content Playback** is set to **Off**.

PJLink

☛ **Network** > **Network Configuration** > **Others** > **PJLink**

Set to **On** to monitor the projector using PJLink.

AMX Device Discovery

☛ **Network** > **Network Configuration** > **Others** > **AMX Device Discovery**

Set to **On** when you want to allow the projector to be detected by AMX Device Discovery.

Crestron Connected

☛ **Network** > **Network Configuration** > **Others** > **Crestron Connected**

Crestron Connected

Set to **On** only when monitoring or controlling the projector over the network using Crestron Connected.

Restart the projector to enable your changes.



Enabling Crestron Connected disables the Epson Message Broadcasting feature in the Epson Projector Management software.

Art-Net

☛ **Network** > **Network Configuration** > **Others** > **Art-Net**

Set to **On** when you want to control the projector using Art-Net.

Net
Enter a number for the projector's Net using 0 to 127 (default is 0).

Sub-Net
Enter a number for the projector's Sub-Net using 0 to 15 (default is 0).

Universe
Enter a number for the projector's Universe using 0 to 15 (default is 0).

Start Channel
Enter the start channel that handles Art-Net using 1 to 495 (default is 1).

Channel Information
You can view the channel information.

Message Broadcasting

☛ **Network** > **Network Configuration** > **Others** > **Message Broadcasting**

Set to **On** to receive the message delivered by Epson Projector Management. See the *Epson Projector Management Operation Guide* for details.



Setting is only displayed when **Crestron Connected** is set to **Off**.

Reset (Network menu)

☛ **Network** > **Network Configuration** > **Reset**

You can reset all adjustment values on the **Network** menu to their default settings, except for the following:

- Wireless Mode

Attention

All of the passwords that have been set for the **Network** menu are also reset and you need to set them again. To prevent the passwords from being reset by unauthorized users, set **Network Protection** to **On** in the **Password Protection** menu.

You can display information about the projector and version by viewing the **Info** menu. However, you cannot change any settings in the menu.

Related Links
- "Projector Info" p.121
- "Light Source Info" p.122
- "Version" p.122
- "Status Information" p.123
- "Voltage Warning Info" p.123
- "Temp Warning Info" p.123
- "Power On/Off History" p.123
- "Export Batch Settings" p.123
- "Import Batch Settings" p.123

Projector Info

☛ **Info** > **Projector Info**

You can view the projector's information.

Operation Hours
Displays the number of hours the projector has been used since it was turned on.

The cumulative use time is displayed as "0H" for the first 10 hours. When exceeding 10 hours, it is displayed as "10H" and "11H" in 1 hour units.

Source
Displays the name of the port to which the current input source is connected.

Input Signal
Displays the input signal setting of the current input source.

Resolution
Displays the resolution of the current input source.

Refresh Rate
Displays the refresh rate of the current input source.

Sync Info
Displays information about video signals that may be needed by a service technician.

Color Format
Displays the color format of the current input source.

Status
Displays information about projector problems that may be needed by a service technician.

Serial Number
Displays the projector's serial number.

Lens Type
Displays the model number of the installed lens.

Event ID
Displays the Event ID number corresponding to a network problem; see the list of Event ID codes.

HDBaseT Signal Level
Displays the signal level of the HDBaseT transmitter; if the information is displayed in yellow, signal level is not enough.

Related Links
- "Event ID Code List" p.121

Event ID Code List

If the **Event ID** option on the **Projector Info** menu displays a code number, check this list of Event ID codes for the solution to the projector problem associated with the code.

If you cannot resolve the problem, contact your network administrator or Epson for technical support.

Event ID code	Cause and solution
0432 0435	The network software did not start. Turn the projector off and then on again.
0433	Cannot display the transferred images. Restart the network software.
0434 0481 0482 0485	Unstable network communication. Check the network communication status, wait a few moments, and try connecting to the network again.
0483 04FE	The network software quit unexpectedly. Check the network communication status, then turn the projector off and then on again.
0484	Communication with computer was disconnected. Restart the network software.
0479 04FF	A projector system error has occurred. Turn the projector off and then on again.
0891	Cannot find an access point with the same SSID. Set your computer, access point, and projector to the same SSID.
0892	The WPA/WPA2/WPA3 authentication type does not match. Make sure the wireless network security settings are correct.
0893	The TKIP/AES encryption type does not match. Make sure the wireless network security settings are correct.
0894	Communication with an unauthorized access point was disconnected. Contact your network administrator.
0895	Communication with a connected device was disconnected. Check your device connection status.
0898	Failed to acquire DHCP. Make sure the DHCP server is operating correctly. If you are not using DHCP, set the **DHCP** setting to **Off** in the projector's **Network** menu.
0899	Other communication errors.

Event ID code	Cause and solution
089A	The EAP authentication type does not match the network. Check the wireless LAN security settings and make sure that the security certificate is installed correctly.
089B	EAP server authentication failed. Check the wireless LAN security settings and make sure that the security certificate is installed correctly.
089C	EAP client authentication failed. Check the wireless LAN security settings and make sure that the security certificate is installed correctly.
089D	Key exchange failed. Check the wireless LAN security settings and make sure that the security certificate is installed correctly.

Light Source Info

☛ **Info** > **Light Source Info**

You can view the projector's light source information.

Light Source Hours

Displays the number of operating hours for each of the projector's **Light Source Mode** settings.

Estimated Remains

If the **Constant Brightness** setting is enabled, displays the remaining number of hours the projector can maintain constant brightness.

☛ **Settings** > **Brightness Settings** > **Constant Brightness**

Version

☛ **Info** > **Version**

You can view the projector's firmware information.

Status Information

☛ **Info** > **Status Information**

You can view the projector's basic status information.

Each category contains the following information.

Status Information
The projector's operating status.

Source
Input signal information.

Signal Information
Input digital signal information.

Network Wired
Wired LAN settings.

Network Wireless
Wireless LAN settings.

Maintenance
Operating time for the projector and light source.

Version
The projector's firmware version

Related Links
- "Projector Status Display Messages" p.164

Voltage Warning Info

☛ **Info** > **Voltage Warning Info**

You can view various voltage warnings.

When you select **Detail** when a Warning or Error is displayed, you can check detailed logs for before and after the error was detected.

Temp Warning Info

☛ **Info** > **Temp Warning Info**

You can view various high temperature warnings.

When you select **Detail** when a Warning or Error is displayed, you can check detailed logs for before and after the error was detected.

Power On/Off History

☛ **Info** > **Power On/Off History**

You can view the power on/off logs.

Export Batch Settings

☛ **Info** > **Export Batch Settings**

You can export the projector's menu settings to a USB flash drive or a computer, allowing you to copy them to other projectors of the same model.

Import Batch Settings

☛ **Info** > **Import Batch Settings**

You can import the menu settings saved to a USB flash drive or a computer.

Settings on the **Reset** menu let you reset certain projector settings to their default values.

Related Links
- "Reset All Memories" p.124
- "Refresh Mode" p.124
- "Light Source Calibration" p.124
- "Reset All Config" p.125
- "Reset All (Factory Default)" p.125

Reset All Memories

☛ **Reset** > **Reset All Memories**

You can delete all memories saved in **Memory**, **Lens Position**, and **Geometry Correction**.

Refresh Mode

☛ **Reset** > **Refresh Mode**

The refresh mode process clears any projected afterimage and turns off the projector after a specified period of time.

Timer
Set a time period during which the projector displays the refresh image.

Messages
Set to **On** to display a message informing you that the projector is in refresh mode.

Start
Starts the refresh mode process to clear any projected afterimage and turn off the projector after a specified period of time. Press any button on the remote control to cancel this process.

Light Source Calibration

☛ **Reset** > **Light Source Calibration**

The light source calibration process optimizes the color balance of the currently projected image.

Run Now
Starts light source calibration to optimize the color balance of the currently projected image. You may not be able to start calibration if the projector's environmental temperature is out of range. (Wait 20 minutes after turning on the projector before starting calibration for the best results.)

Light Source Calibration does not start in the following cases.

- If the projector is not used continuously for more than 20 minutes.
- If the surrounding temperature gets too high, and the brightness has been automatically dimmed.
- If you use the following functions and the brightness of the light source declines to a specific level or lower.
  - Dynamic Contrast
  - Lights-Out Control
  - A/V Mute (EB-PU2120W)
  - Shutter (EB-PU2220B)
- If **Brightness Settings** is set to 30% or less.

Run Periodically
Set to **On** to perform light source calibration periodically every 100 hours of usage.

When set to **Off** to maintain the projected image that has been adjusted using Multi-Projection, perform calibration using **Run Now** or set a **Light Source Calibration** event to perform it periodically on the **Schedule Settings** screen.

Schedule Settings
Displays the **Schedule Settings** screen. Set a **Light Source Calibration** event to run periodically.

Last Run

Displays the date and time of the last light source calibration.

Reset All Config

☛ **Reset** > **Reset All Config**

You can reset most of the projector settings to their default values.

You cannot reset the following settings:

- Memory
- Startup Screen *
- Panel Alignment
- Color Uniformity
- User's Logo *
- Date & Time
- Color Matching
- Schedule Settings
- Language
- Network menu items other than **Wireless Mode**
- NFC Settings

* These settings are reset when you set **User's Logo Protection** to **Off**.

Reset All (Factory Default)

☛ **Reset** > **Reset All (Factory Default)**

You can reset the setting values to the values you set or to their factory default values.

Reset All (User Default)

You can apply the values you set in the **User Default Setting** menu.

Reset All (Factory Default)

You can reset all of the projector settings to their default factory values.

You cannot reset the following settings:

- Light Source Info
- Operation Hours
- Password Protection
- Schedule Settings *

* This setting is reset when you set **Schedule Protection** to **Off**.

Attention

All of the passwords that have been set for the **Network** menu are also reset and you need to set them again. To prevent the passwords from being reset by unauthorized users, set **Network Protection** to **On** in the **Password Protection** menu.

User Default Setting

You can define the default value used when performing the **Reset All (User Default)** functions.

You can set the values for the following settings:

- Color Mode
- Light Source Mode
- Brightness Level
- Energy Saving Mode
- Constant Brightness
- Messages
- Standby Confirmation
- A/V Mute Timer (EB-PU2120W)
- Release A/V Mute (EB-PU2120W)
- Shutter Timer (EB-PU2220B)
- Shutter Release (EB-PU2220B)

- Remote Control Type
- Beep
- A/V Settings
- Standby Mode
- Sleep Mode
- Language
- Wireless Mode
- DHCP (in the Wired LAN menu)
- Command Communication

Password Setting

You can set a password when resetting values to the user default setting values or to their factory default values. No password is set by default. You must set a password.

Adjusting Projector Features

Follow the instructions in these sections to use your projector's adjustment features.

Related Links
- "Multi-Projection Features" p.128
- "External Camera Usage" p.138

You can combine the projected images from multiple projectors to create one bright image or a large seamless image (Multi-Projection).

The number of projectors that can be used depends on the function and method.

- Projecting one large image by compositing several images (tiling): up to 15 projectors
- Projecting a bright image by overlaying images (stacking)
  - Using the Epson Projector Professional Tool software: up to 6 projectors
  - Using the projector's menu: up to 2 projectors

Related Links

- "Procedure Overview" p.128
- "Preparing for Multi-Projection" p.128
- "Image Composition" p.130
- "Adjusting Colors" p.137

Procedure Overview

We recommend using the following procedure for Multi-Projection.

Preparation

- Initializing projectors
- Assigning a master projector
- Calibrating projectors
- Installing projectors
- Performing rough image adjustments
- Connecting projectors to a network

Image Composition

- Tiling
- Stacking

Adjusting colors

- Adjust the Hue, Saturation, and Brightness settings for individual image colors.
- Adjust the overall tint of the image.

Preparing for Multi-Projection

This section explains how to perform basic settings before installing the projector and preparing in advance for easier operations later.

Related Links

- " Initializing Projectors" p.128
- "Assigning a Master Projector" p.129
- " Calibrating Projectors" p.129
- "Installing Projectors" p.129
- "Performing Rough Image Adjustments" p.130
- "Connecting Projectors to a Network" p.130

Initializing Projectors

You need to correct the difference in settings for each projector.

Do the following operations for all projectors:

- Reset the projector settings to their default values.

  ☛ **Reset** > **Reset All Config**
- Reset the values on the **Color Uniformity** menu to their default settings.

  ☛ **Extended** > **Display** > **Color Uniformity** > **Reset**
- Reset the values on the **Panel Alignment** menu to their default settings.

  ☛ **Extended** > **Display** > **Panel Alignment** > **Reset**
- Set the **Adjustment Level** setting to **All** in the **Color Matching** menu, and select 0 for **Red**, **Green**, and **Blue**.

☛ **Extended** > **Multi-Projection** > **Screen Matching** > **Color Matching**

- Set the **4K Enhancement** setting to **Off**.
  ☛ **Image** > **Image Enhancement** > **4K Enhancement**
- Set the **Sleep Mode** setting to **Off**.
  ☛ **Extended** > **Operation** > **Sleep Mode**

Related Links
- "Sleep Mode" p.99
- "Reset All Config" p.125

Assigning a Master Projector

Select one projector to be the basis for adjustment.

Display test patterns from all projectors and select the one that has less color unevenness as the master projector.

- You can display the test pattern by pressing the **Test Pattern** button on the control panel or remote control.
- We recommend displaying the following test patterns:
  Grayscale, **Gray Bars V**, **Gray Bars H**, and **White**
- When using the remote control, we recommend assigning the same ID for the master projector and the remote control to limit the control target.

Related Links
- "Projector ID" p.104

Calibrating Projectors

Perform the following operations for all projectors to adjust the color balance and brightness that has deteriorated over time, and minimize the color tone difference between each projected image:

- Perform light source calibration.
  ☛ **Reset** > **Light Source Calibration**
- Perform color calibration if you install the optional external camera.
  ☛ **Extended** > **Color Calibration**
- Perform **Color Uniformity** if you do not install the optional external camera or you were unsuccessful performing color calibration.
  ☛ **Extended** > **Multi-Projection** > **Screen Matching** > **Color Uniformity**
- Set the **Color Mode** setting to **Multi-Projection**.
  ☛ **Image** > **Color Mode**
- Set the **Energy Saving Mode** setting to **Off**.
  ☛ **Settings** > **Brightness Settings** > **Energy Saving Mode**

- We recommend that you set **Run Periodically** to **Off** in the **Light Source Calibration** menu. If you set **On**, the color adjusted in multi-projection may be changed due to auto calibration.
- You can also change the projector's **Color Mode** using the [Color Mode] button on the remote control.

Installing Projectors

Install all projectors in an appropriate location.

When you install the master projector in the center, you can easily calibrate colors because any unevenness at the center of the projected area is reduced.

Performing Rough Image Adjustments

Perform the following operations for all projectors to adjust the position and the shape for rectangular projected images.

Displaying the test pattern makes it easier to adjust the projection position and the shape.

- For projection position, adjust the location, the angle, and the lens shift.
- For projection size, adjust the location and the zoom.
- For image focus, adjust the focus.

- The projected images are not stable right after turning on the projector. We recommend adjusting the projector at least 20 minutes after you start projecting.
- We recommend displaying the following test patterns:

  Grayscale, **Gray Bars V**, **Gray Bars H**, and **White**
- When adjusting the image height with vertical lens shift, adjust it by moving the image from the bottom to the top.

  If you adjust it from the top to the bottom, the image position may move down slightly after adjusting.
- It is not recommended that you perform geometry correction for the following reasons:
  - Image quality may decline.
  - If the correction value is too large, image calibration may be difficult.

Related Links

- "Lens Shift" p.60
- "Zoom" p.61
- "Focus/Distortion " p.62

Connecting Projectors to a Network

Connect all projectors to the network hub with LAN cables.

When a connection is established, check that all projectors have been assigned their own IP address assigned.

If you are combining images from multiple projectors on a network, you can assign one projector as the "master" and automatically adjust all the images to match the "master" image. If the projectors are not connected to a network, you can match each projector's images manually.

Related Links

- "Wired Network Connection" p.40

Image Composition

You can create a bright composite image and a large image from multiple projectors.

Choose an adjustment method for composing images based on your environment.

- If you have installed the optional external camera and the Epson Projector Professional Tool software is available, you can automatically adjust image by using the Camera Assist function of the Epson Projector Professional Tool software.
- If you have not installed the optional external camera or the Epson Projector Professional Tool software is not available, you can manually adjust image using the projector's menu.

You can download the Epson Projector Professional Tool software and its manual from the following website.

epson.sn

Related Links

- "Tiling Using the Epson Projector Professional Tool Software" p.131
- "Tiling Using the Projector's Menu" p.131
- "Stacking Using the Epson Projector Professional Tool Software" p.135
- "Stacking Using the Projector's Menu" p.136

Tiling Using the Epson Projector Professional Tool Software

You can project one large image from up to 15 projectors using the optional external camera and the Epson Projector Professional Tool software.

See the *Epson Projector Professional Tool Operation Guide* for details.

When the screen illuminance is 40 lux or less, the projection size within the following range is recommended.

- Up to 9.9 Klm: 50 to 200 inches
- 10 Klm to 14.9 Klm: 60 to 300 inches
- 15 Klm to 19.9 Klm: 70 to 350 inches
- 20 Klm to 24.9 Klm: 80 to 400 inches
- 25 Klm to 29.9 Klm: 90 to 450 inches
- 30 Klm or more: 100 to 500 inches

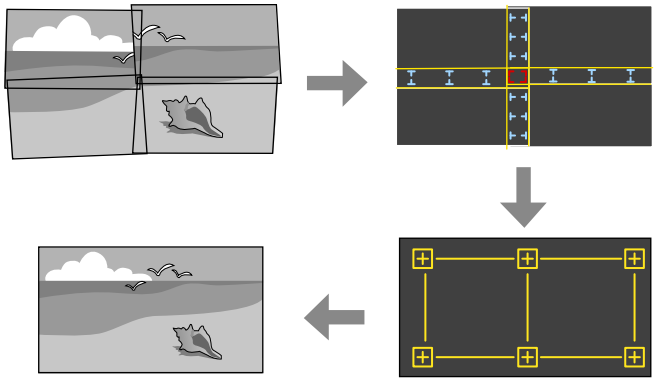

1. Start the Epson Projector Professional Tool software.
2. Create a group of projectors on the **Layout/Monitoring** tab.
3. Specify each projector's position using **Tiling and Stacking Settings** on the **Edit Group** screen.
4. Start the **Geometry Correction Assist - Tiling Function** wizard.

When the wizard has finished, perform the following operations as necessary:

- **Screen Matching** to correct the tint and brightness of each projected image.
- **Point Correction** to adjust the gaps in the positions of the projected image.
- **Scale** to crop and/or scale portions of the image.

- The required time for configuring tiling automatically varies depending on the layout and number of projectors. It takes up to approximately 8 minutes.
- The required time for screen matching varies depending on the layout and number of projectors. It takes up to approximately 18 minutes.

Tiling Using the Projector's Menu

If you have not installed the optional external camera or the Epson Projector Professional Tool software is not available, you can project one large image from up to 15 projectors using the projector's menu.

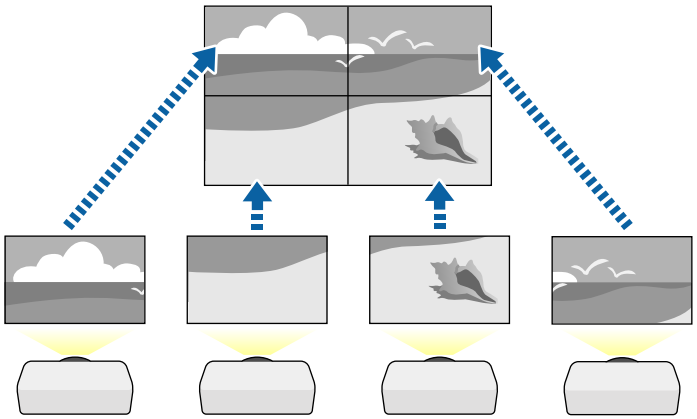

1 Select the **Multi-Projection** setting in the projector's **Extended** menu.

2 Select the **Projector ID** setting and give each projector a unique ID to control multiple projectors from a remote control.

3 Set the remote control's ID to match the projector's ID to operate only a particular projector. Set the remote control [ID] switch to **On**, press the [ID] button on the remote control, and then press the numeric button that matches the projector's ID within 5 seconds. (Enter a one-digit or two-digit number.)

4 If you are combining images from multiple projectors on a network, select the **Projector Grouping** setting on the master projector and create a group of projectors that you can control simultaneously.

5 Select the **Tiling** setting to adjust the arrangement of the images to create one large image.

- If you have installed the optional external camera, select **Auto** on the master projector.
- If you have not installed the optional external camera or tiling the images automatically was unsuccessful, select **Manual**.
- When selecting **Manual**, select **Layout**, and then select the number of rows and columns you are setting up as the **Row** and **Column** settings.
- After making the **Layout** settings, select **Location Setup**. Select the position of each projected image as follows: **Row Order** to layout the screens from top to bottom in sequential order starting with **1** at the top, **Column Order** to layout the screens from left to right starting with **A** on the left.

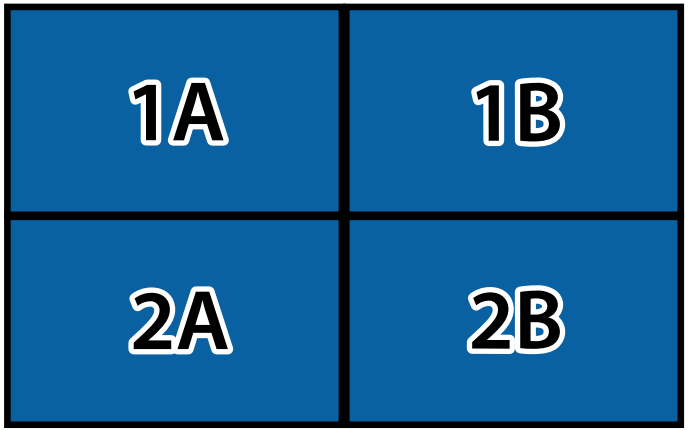

- Select the **Layout** and **Location Setup** settings on each projector you are setting up.

6 Select the input signal to display an image.

7 Select **Edge Blending** to adjust the edges of the images.

- Set the **Edge Blending** setting to **Blending/Black Level** or **Black Level**, and turn on the **Line Guide** and **Pattern Guide** settings first. When you adjust the blending area using another device such as a media server, select **Black Level**.
- Select the edge you want to blend on each projector, and set the **Blending** setting to **On**.

- Select the **Blend Start Position** setting and adjust the blending start position.
- Select the **Blend Range** setting and use the arrow buttons to select the width of the blended area so that the displayed guides are at the edges of the overlapping area between the two images.

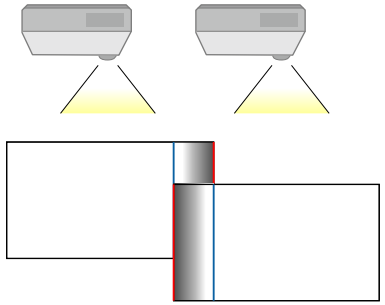

- Select the **Blend Curve** setting and select a gradient for the shaded area on the projectors.

When the edges are blended, turn off the **Line Guide** and **Pattern Guide** settings on each projector to check the final settings.

8 Select the **Black Level** settings to make the difference less noticeable for the overlapping areas.

- Select **Color Adjustment** first.

  The adjustment areas are displayed based on the **Edge Blending** setting.
- Use the arrow buttons to select the area you want to adjust and press [Enter].

  The selected area is displayed in orange. Adjust the black tone.

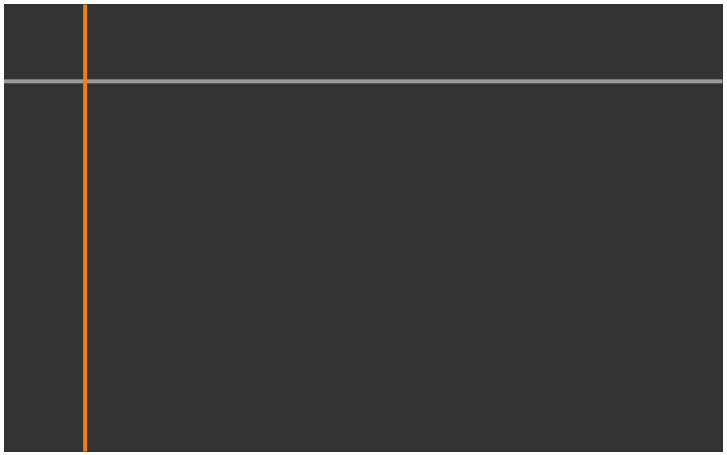

- When multiple screens are overlapping, adjust based on the area with the most overlap (the brightest area). In the illustration below, first align (2) with (1), and then adjust so that (3) aligns with (2).

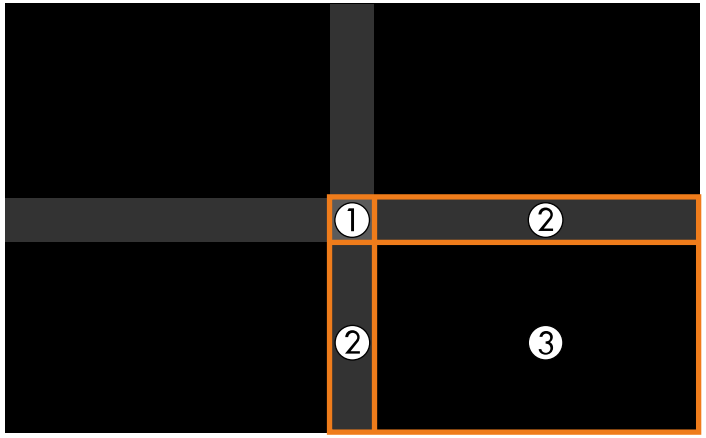

- Repeat these steps as needed to adjust any remaining screen areas.
- When you are finished, press the [Esc] button.

9 If there are areas where the color does not match, select **Area Correction**.

- Select **Start Adjustments** first.

  Boundary lines indicating where images overlap are displayed. The lines are displayed based on the **Edge Blending** setting.

- Use the arrow buttons to select the boundary line you want to adjust, and then press [Enter].

  The selected line is displayed in orange.



- Use the arrow buttons to adjust the line position, and then press [Enter]. Next, use the arrow buttons to select the point you want to move, and then press [Enter].

  The selected point is displayed in orange. You can move the point using the arrow buttons.

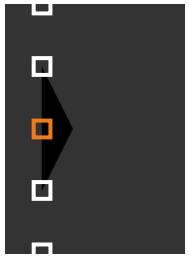

- You can change the number of the displayed points using the **Points** setting.
- To continue to move another point, press [Esc] and then repeat the previous steps.
- To adjust another boundary line, press [Esc] until the screen is displayed.

10 If you are combining images from multiple projectors on a network, select the **Screen Matching** setting to adjust the brightness and tint of the images.

The required time for screen matching varies depending on the layout and number of projectors. It can take up to approximately 18 minutes.

11 If the projectors are not connected to a network or you want to adjust manually after performing automatic adjustments, select the **Color Matching** setting to adjust the brightness and tint of the images manually.

- Select a value for the **Adjustment Level** setting, and adjust the color tone for the **Red**, **Green**, or **Blue** settings, and then adjust the **Brightness** setting.
- Repeat these steps as necessary to adjust each adjustment level.

12 Select the **Scale** setting to select sections of the images.

- Set the **Scale** setting to **Auto** or **Manual** first.
- Select the **Scale Mode** setting and select one of the following options:
  - **Zoom Display** to maintain the image aspect ratio as you scale the image.

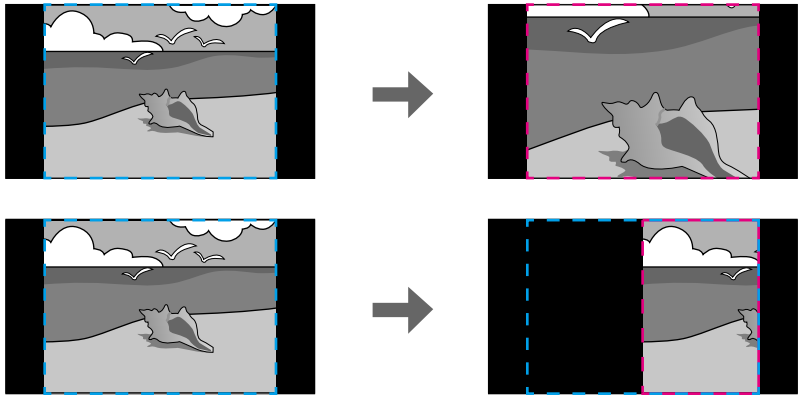

- **Full Display** to adjust the image to the projector's screen size as you scale the image.

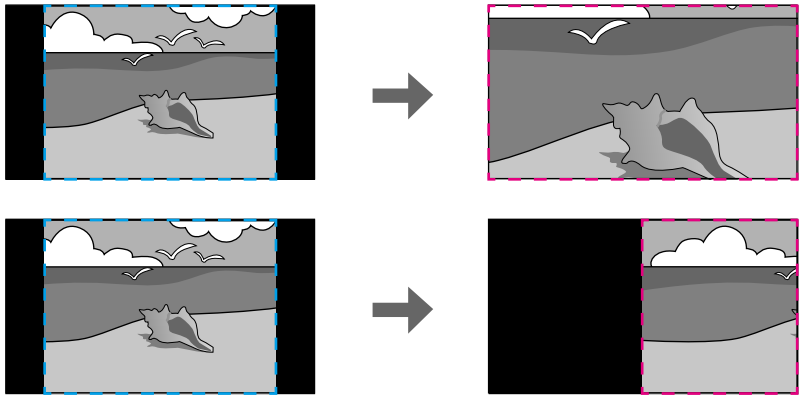

- Select one or more of the following scaling options and adjust it as necessary:
  - - or + to scale the image horizontally and vertically at the same time.
  - **Scale Vertically** to scale the image vertically only.
  - **Scale Horizontally** to scale the image horizontally only.
- Select the **Clip Adjustment** setting and use the arrow buttons to adjust the coordinates and size of each image as you view the screen.
- Select **Clip Range** to preview the clipped area you selected.

Related Links

- "Projector ID" p.104
- "Projector Grouping" p.105
- "Tiling" p.105
- "Edge Blending" p.105
- "Black Level" p.106
- "Screen Matching" p.107
- "Color Matching" p.107
- "Scale" p.83

Stacking Using the Epson Projector Professional Tool Software

You can create one bright image by overlaying images from up to 6 projectors using the optional external camera and the Epson Projector Professional Tool software.

See the *Epson Projector Professional Tool Operation Guide* for details.

When the screen illuminance is 40 lux or less, the projection size within the following range is recommended.

- Up to 9.9 Klm: 50 to 200 inches
- 10 Klm to 14.9 Klm: 60 to 300 inches
- 15 Klm to 19.9 Klm: 70 to 350 inches
- 20 Klm to 24.9 Klm: 80 to 400 inches
- 25 Klm to 29.9 Klm: 90 to 450 inches
- 30 Klm or more: 100 to 500 inches

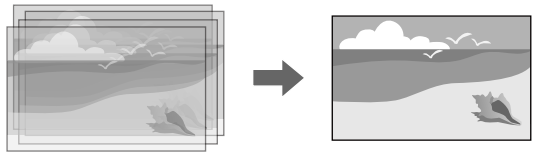

1. Start the Epson Projector Professional Tool software.
2. Create a group of projectors on the **Layout/Monitoring** tab.
3. Specify each projector's position using **Tiling and Stacking Settings** on the **Edit Group** screen.
4. Start the **Geometry Correction Assist - Stacking Function** wizard.

When the wizard has finished, if there are any gaps in the pixels of the projected images, adjust the **Point Correction** setting manually.

The required time to automatically configure stacking varies depending on the layout and number of projectors. It can take up to approximately 9 minutes.

Stacking Using the Projector's Menu

If the Epson Projector Professional Tool software is not available, you can create one bright image by overlaying images from up to 2 projectors using the projector's menu.

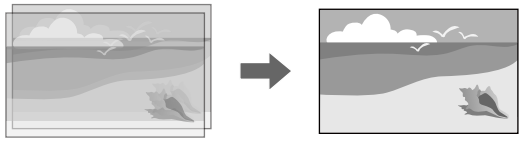

This function is only available when the optional external camera is installed.

1. Connect two projectors using a LAN cable.
2. Make sure the **DHCP** setting is turned on in the projector's **Network** menu for two projectors.

   Wait for 1 minute after assigning an IP address automatically.

3. Select **Extended** > **Multi-Projection** > **Simple Stacking** > **Point Correction**, and adjust the image position, shape, and focus on one of the projectors (this projector becomes the master projector), using the **Quick Corner** menu.
4. Select **Start Auto Adjustment** and follow the on-screen instructions.

When the automatic adjustment has finished, if there are any gaps in the pixels of the projected images, adjust the **Point Correction** setting manually.

- The required time for simple stacking varies depending on the projector layout. It can take up to approximately 5 minutes.
- If you have not installed the optional external camera, adjust the following settings manually:
  - Focus
  - Zoom
  - Lens Shift
  - Geometry Correction

Related Links

- "Simple Stacking" p.108
- "Conditions for Simple Stacking" p.108
- "IP Settings" p.115
- "Point Correction" p.62
- "Geometry Correction" p.85
- "Focus/Distortion " p.62
- "Zoom" p.61
- "Lens Shift" p.60

Adjusting Colors

Display the test patterns from all projectors to check each color tone.

If you need adjust the color tone, perform the following operations:

- Adjust the Hue, Saturation, and Brightness settings for individual image colors.

  ☛ **Image** > **Advanced** > **RGBCMY**

- Adjust the overall tint of the image.

  ☛ **Image** > **White Balance**



We recommend displaying the following test patterns:
Gray Bars V, **Gray Bars H**, and **White**

External Camera Usage

When you install the optional external camera on the projector, you can use the following functions to help you adjust the image.

- Adjust the image automatically using the Epson Projector Professional Tool software (Camera Assist function).
- Create a bright projected image by overlapping the images from two projectors (Simple Stacking).
- Check the image you captured using the optional external camera in Epson Web Control (Remote Camera Access).
- Correct differences in the tint and brightness between projectors to optimize the display quality of the combined image (Screen Matching).
- Adjust the color tone of the entire screen when it has declined over time (Color Calibration).

As the external camera is installed on the projector or the lens, a tripod and installation space is unnecessary. There is also no need to adjust the focus, angle, and exposure.

See the external camera manual for the installation method.



- You can download the Epson Projector Professional Tool software and manual from the following website.

  epson.sn

- This function is not available when you use the following optional lenses:
  - ELPLL08

Related Links

- "Multi-Projection Features" p.128
- "Web Control Options" p.144
- "Simple Stacking" p.108
- "Screen Matching" p.107
- "Color Calibration" p.104

Monitoring and Controlling the Projector

Check these sections to monitor and control the projector over a network.

Related Links

- "Projector Monitoring and Control Options" p.140
- "Accessing a Networked Projector Using a Web Browser" p.143

You can monitor and control the projector over a network in various way.

Related Links
- "Epson Projector Management" p.140
- "Epson Web Control" p.140
- "SNMP" p.140
- "ESC/VP21 Commands " p.140
- "ESC/VP.net Commands" p.141
- "PJLink" p.141
- "Art-Net" p.141
- "Crestron Connected Support" p.141
- "Web API" p.142

Epson Projector Management

Epson Projector Management software (Windows only) lets you monitor and control your projector through the network. See the *Epson Projector Management Operation Guide* for instructions.

You can download Epson Projector Management from the following Web site.

epson.sn

The authentication method when registering projectors varies depending on the version of the Epson Projector Management software you are using. For the best results, we recommend that you use the latest version of the Epson Projector Management software.

Epson Web Control

Once you have connected your projector to your network, you can select projector settings and control projection using a compatible Web browser. This lets you access the projector remotely.

In Content Playback mode, you can also edit playlists.

- You can use the following Web browsers.
  - Internet Explorer 11 or later (Windows)
  - Microsoft Edge (Windows)
  - Safari (Mac, iOS)
  - Chrome (Android)
- While using the Web browser, do not connect using a proxy server. You cannot select all of the projector menu settings or control all projector functions using a Web browser.
- If you set **Standby Mode** to **Communication On**, you can use a Web browser to select settings and control projection even if the projector is in standby mode.

  ☛ **Extended** > **Standby Mode**

Related Links
- "Accessing a Networked Projector Using a Web Browser" p.143

SNMP

Network administrators can install SNMP (Simple Network Management Protocol) software on network computers so they can monitor projectors. If your network uses this software, you can set up the projector for SNMP monitoring.

☛ **Network** > **Network Configuration** > **Notifications** > **SNMP**

This projector supports SNMP agent version 1 (SNMPv1).

ESC/VP21 Commands

You can control the projector from an external device using ESC/VP21.

When the power ON command is transmitted to the projector, the power turns on and it enters warm-up mode. When the projector's power has turned on, a colon ":" (3Ah) is returned.

When a command is input, the projector executes the command and returns a ":", and then accepts the next command.

If the command being processed terminates abnormally, an error message is output and a ":" is returned.

See the projector's *Specifications* for details.



You can also execute some of the ESC/VP21 commands by Web API. See the *Web API Specifications for Projectors* for details.

ESC/VP.net Commands

You can monitor the projector using ESC/VP.net commands.

When the **Command Communication** setting is set to **Protected**, you can connect the projector with version 2.0 using **Web Control Password**.

When the **Command Communication** setting is set to **Compatible**, you can connect the projector with version 2.0 or 1.0. Use **Monitor Password** for version 1.0. You can set **Monitor Password** in Epson Web Control.

☛ **Network** > **Network Configuration** > **Others** > **Command Communication**

See the projector's *Specifications* for details.

PJLink

PJLink was established by the JBMIA (Japan Business Machine and Information System Industries Association) as a standard protocol for controlling network-compatible projector's as part of their efforts to standardize projector control protocols.

The projector complies with the PJLink Class2 standard established by the JBMIA.

The port number used for the PJLink search function is 4352 (UDP).

You need to make network settings before you can use PJLink.

☛ **Network** > **Network Configuration** > **Basic** > **PJLink Password**

☛ **Network** > **Network Configuration** > **Notifications** > **PJLink Notification**

☛ **Network** > **Network Configuration** > **Others** > **PJLink**

It complies with all commands except for the following commands defined by PJLink Class2, and agreement was confirmed by the PJLink standard adaptability verification.

Non-compatible commands:

Function		PJLink command
Mute settings	Image muting set	AVMT 11
	Audio muting set	AVMT 21

http://pjlink.jbmia.or.jp/english/

See the projector's *Specifications* for details.

Art-Net

Art-Net is an Ethernet communication protocol based on the TCP/IP protocol. You can control the projector by using a DMX controller or an application system.

See the projector's *Specifications* for details.

Crestron Connected Support

If you are using the Crestron Connected network monitoring and control system, you can set up your projector for use on the system. Crestron Connected lets you control and monitor your projector using a Web browser.

You can access the Crestron Connected operation window from Epson Web Control. You need to enable Crestron Connected in the projector's **Network** menu before you can use Crestron Connected.

☛ **Network** > **Network Configuration** > **Others** > **Crestron Connected**

- You cannot use the Message Broadcasting feature in Epson Projector Management when you use Crestron Connected.

For additional information on Crestron Connected, visit the Crestron Web site.

https://www.crestron.com/

To monitor devices in the system, you can use Crestron RoomView Express or Crestron Fusion provided by Crestron. You can communicate with the help desk and send emergency messages. See the following Web site for details.

http://www.crestron.com/getroomview

Web API

You can use Web API to operate the projector. See the *Web API Specifications for Projectors* for details.

- You can authenticate Web API communications using API authentication (Digest authentication).
- The user name for API authentication is **EPSONWEB**; use the password that is set for **Web Control Password**.

  ☛ **Network** > **Network Configuration** > **Basic** > **Web Control Password**

Once you have connected your projector to your network, you can select projector settings and control projection using a compatible Web browser. This lets you access the projector remotely.

> You can also control the projector using the web browser from "Epson iProjection (iOS/Android)".

1. Make sure the projector is turned on.
2. Make sure your computer or device is connected to the same network as the projector.
3. Start your Web browser on the computer or device.
4. Go to the **Epson Web Control** screen by entering the projector's IP address into the browser's address box. When entering an IPv6 address, wrap the address with [and].

   You see the **Epson Web Control** screen.

   - In normal mode

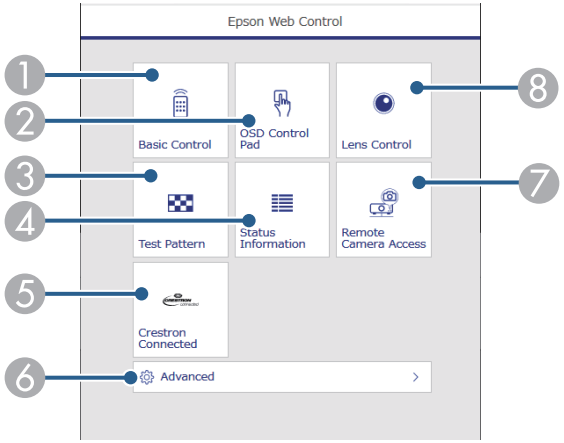

1. Controls the projector remotely.
2. Operates the projector's menu settings with your finger or mouse.
3. Displays a test pattern.
4. Displays the projector's status.
5. Opens the Crestron Connected operation window. Available only when you set the Crestron Connected system.
6. Opens detailed projector settings.
7. Takes an image capture of the displayed image from a remote location.
8. Operates the projector's lens.

> You can also check the projector's log files by entering "https://<projector's IP address>/logs/" into your browser's URL bar when you set **Log Save Destination** to **USB and Internal Memory** in the projector's **Extended** menu.

- In Content Playback mode

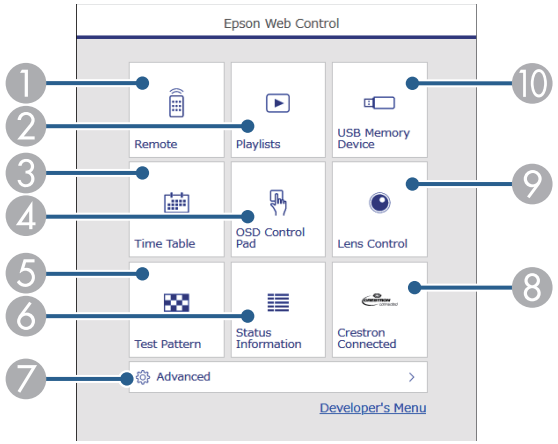

1. Controls the projector remotely.
2. Selects the playlist you want to play, and allows you to create or edit playlists.
3. Opens the **Time Table** screen.

④ Operates the projector's menu settings with your finger or mouse.
⑤ Displays a test pattern.
⑥ Displays the projector's status.
⑦ Opens detailed projector settings.
⑧ Opens the Crestron Connected operation window. Available only when you set the Crestron Connected system.
⑨ Operates the projector's lens.
⑩ Registers or deletes the data for a playlist on the USB flash drive.

5 Select the option corresponding to the projector function you want to control.

You may need to log in to access some of the options on the **Epson Web Control** screen. Set the following passwords first.

- To access the **Basic Control** option, you need to log in using **EPSONREMOTE** as the user name and your **Remote Password**. (No password is set by default.)

  Set **Basic Control** to **On** in the projector's **Network** menu, and then set the password.

  ☛ **Network** > **Network Configuration** > **Others** > **Basic Control**

- To access other options and save settings, you need to log in using **EPSONWEB** as the user name and your **Web Control Password**. (No password is set by default.)

  Set the password in the projector's **Network** menu.

  ☛ **Network** > **Network Configuration** > **Basic** > **Web Control Password**

Related Links
- "Web Control Options" p.144

Web Control Options

Basic Control (only in normal mode)

Options on the **Basic Control** screen allow you to select the input source and control the projector.

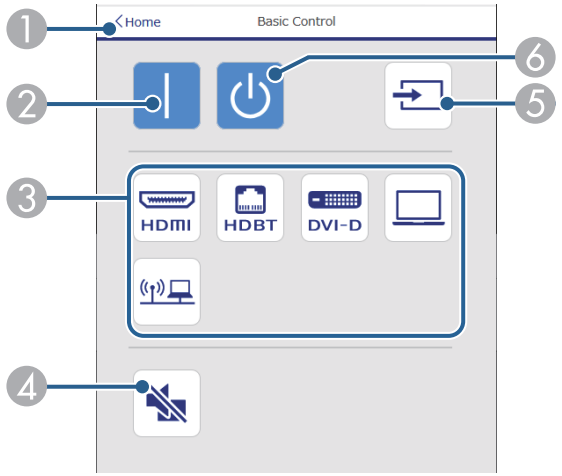

① Returns to the **Epson Web Control** screen.
② Turns the projector on.
③ Selects the input source. (The available sources vary depending on your projector model.)
④ Turns the video and audio on or off temporarily.
⑤ Detects the input signal automatically.
⑥ Turns the projector off.

OSD Control Pad

Options on the **OSD Control Pad** screen allow you to display the projector's setting menus and select them moving your finger or mouse on the pad.

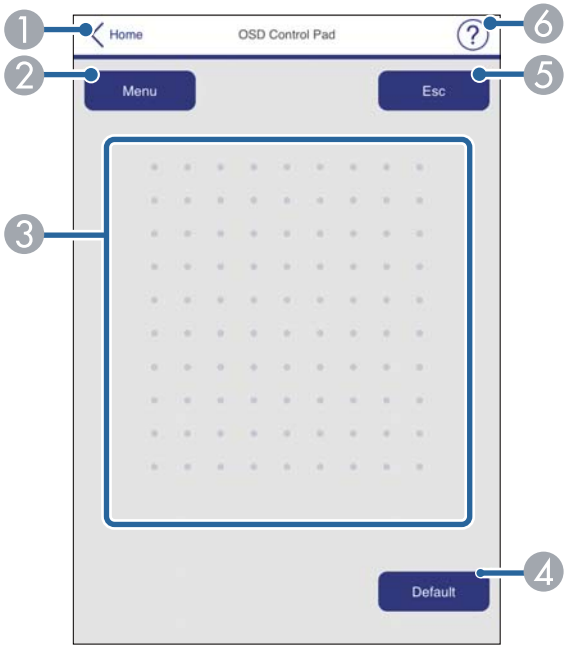

1. Returns to the **Epson Web Control** screen.
2. Displays the projector's setting menus.
3. Use your finger or mouse to navigate the menus.
4. Resets the selected setting to its default value.
5. Returns to the previous menu.
6. Displays help topics.

Lens Control

Options on the **Lens Control** screen allow you to operate the lens of the projector.

Focus/Distortion screen

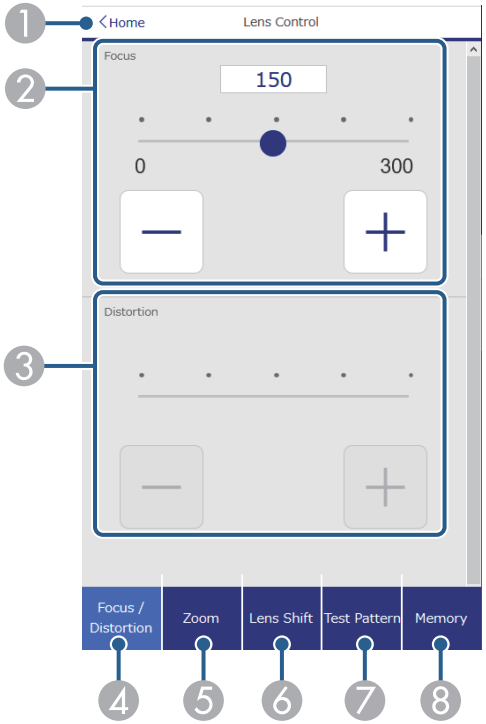

1. Returns to the **Epson Web Control** screen.
2. Adjusts the image focus.
3. Adjusts the image distortion.
4. Displays the **Focus/Distortion** screen.
5. Displays the **Zoom** screen.
6. Displays the **Lens Shift** screen.
7. Displays the **Test Pattern** screen.
8. Displays the **Memory** screen.

Zoom screen

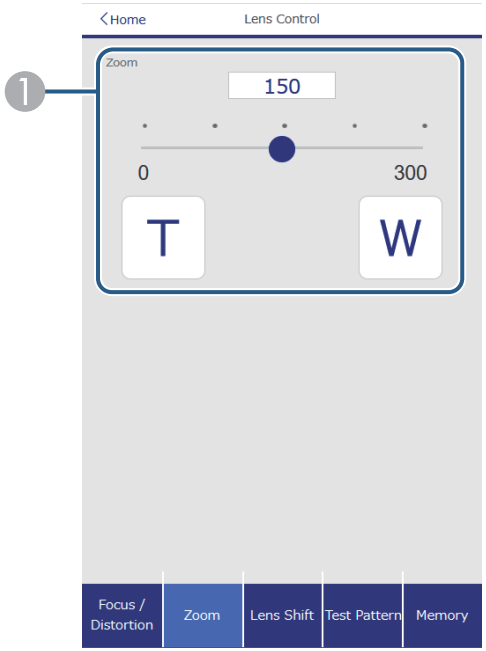

1. Adjusts the image size.
   W: Enlarges the size of the projected image.
   T: Reduces the size of the projected image.

Lens Shift screen

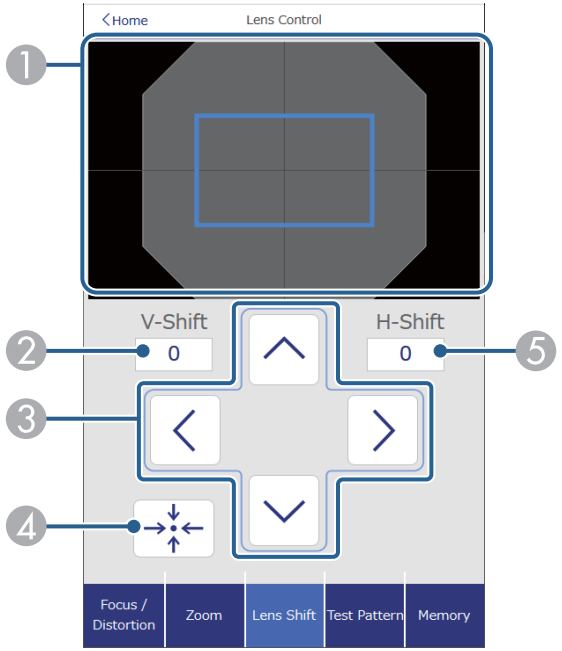

1. The blue square displays the current image position and the red square displays the new image position.
2. Displays the vertical image position; select to change the value.
3. Moves the image position up, down, left, or right.
4. Moves the lens to the home position.
5. Displays the horizontal image position; select to change the value.

Test Pattern screen

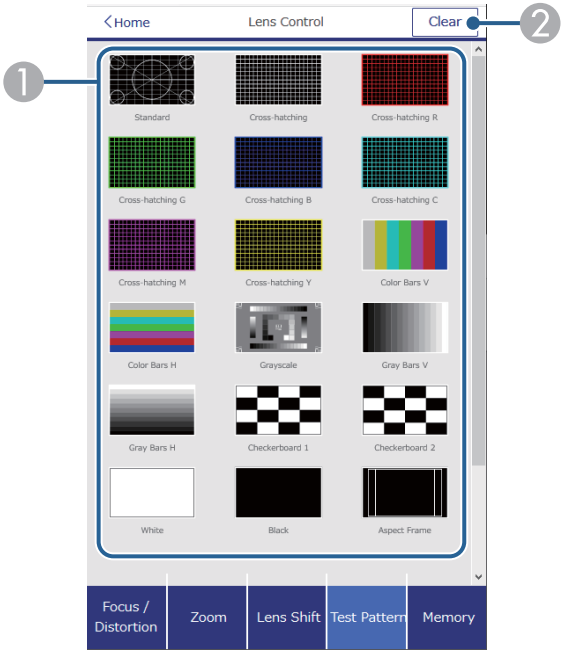

1. Displays available test patterns; select to project a test pattern.
2. Turns off test pattern display.

Memory screen

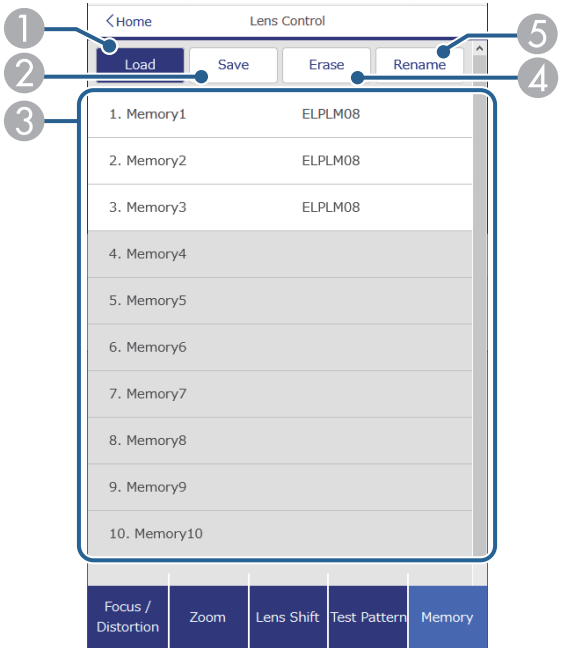

1. Overwrites your current settings with saved settings.
2. Saves your current settings to memory.
3. Displays a list of saved memories.
4. Erases a saved memory.
5. Renames a saved memory.

Status Information

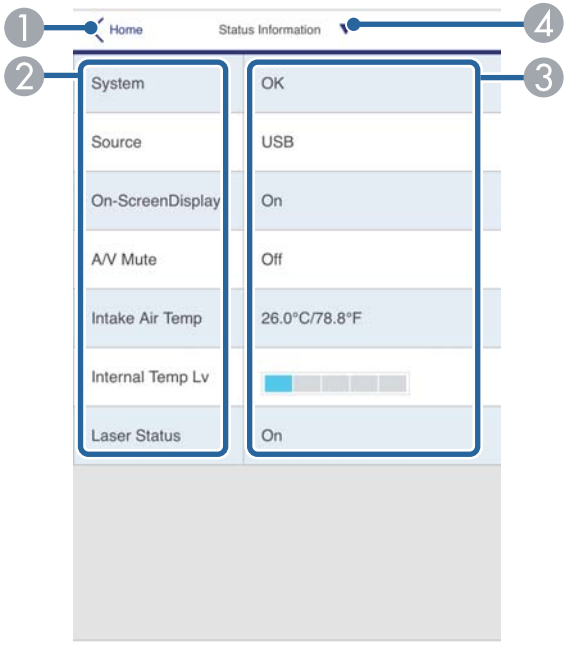

1. Returns to the **Epson Web Control** screen.
2. Displays a list of monitored settings.
3. Displays the setting status.
4. Select to view different status information.

Remote Camera Access (only in normal mode)

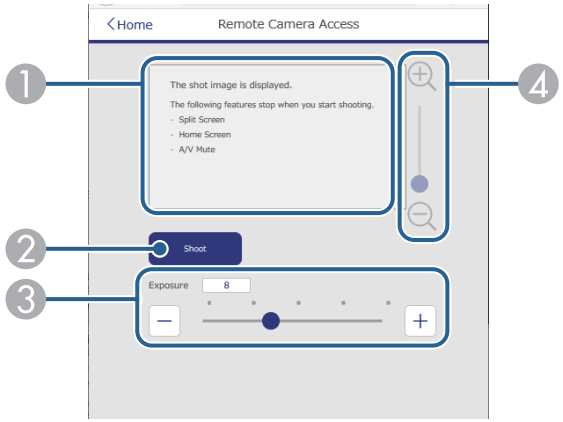

1. Displays the image you captured using the **Shoot** button.
2. Takes a picture of the projected image using the optional external camera installed on the projector.
3. Adjusts the image exposure.
4. Zooms in or out on the image you captured.

Advanced

The **Advanced** screen allow you to select the projector's settings.

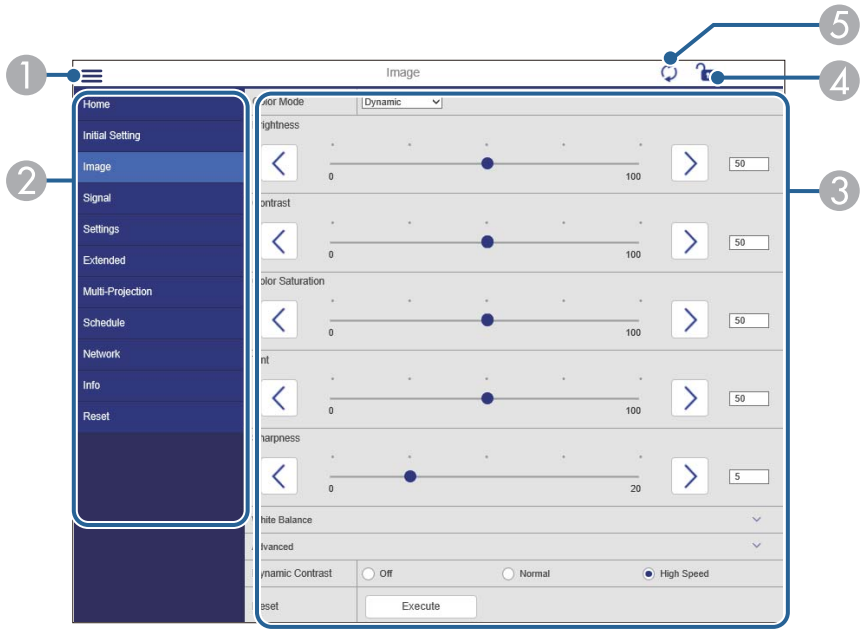

1. Opens the menus.
2. Displays the menu name you selected.
3. Specifies the projector settings. (The available settings vary depending on your projector model.)
4. Locks/unlocks the projector settings.
5. Updates the projector settings.

You cannot change the following settings using Epson Web Control.

- **Custom** setting for **Gamma**
- **EDID**
- **HDMI Link**
- **User Button**
- **Content Playback**
- **Simple Stacking**
- **Message Position**
- **User's Logo**
- **Lens Calibration**
- **Language**
- **Wireless LAN Diagnosis**
- **Search Access Point**
- **Crestron Connected**
- **Event ID**
- **HDBaseT Signal Level**
- **Antenna Level**

You can select the following settings only with Epson Web Control.

- Monitor Password (up to 16 alphanumeric characters) (only when Command Communication is set to Compatible)
- IPv6 Settings (manual)
- HTTP port (port number used for Web Control except for 80 [default], 843, 3620, 3621, 3625, 3629, 4352, 4649, 5357, 10000, 10001, 41794)
- Display Logs

Remote (only in Content Playback mode)

Options on the **Remote** screen allow you to select the input source, control the projector, and start projecting playlists.



1. Returns to the **Epson Web Control** screen.
2. Turns the projector on or off.
3. Selects the input source. (The available sources vary depending on your projector model.)
4. Turns the video and audio on or off temporarily.
5. **Overlay Effect** option is displayed when the current source is anything other than USB.

   Turns **Overlay Effect** on or off to add color and shape effects to a playlist.

   When turning on, the **Effects** screen is displayed. You can add predefined color and shape effect filters to a playlist. You can also create a customized effect.
6. Specifies the screen settings.
7. Displays your favorite playlists. Select a playlist to start projecting.
8. Displays information for the playlist being projected.

   The icons indicate the playlist settings.

   : Overlay effects have been applied

   : Repeat playback has been applied

   : Length of the playlist

   Select the arrow at the bottom-right to display the following screen.
9. Adjusts the speaker volume.

Screen displayed while projecting playlist (only in Content Playback mode)

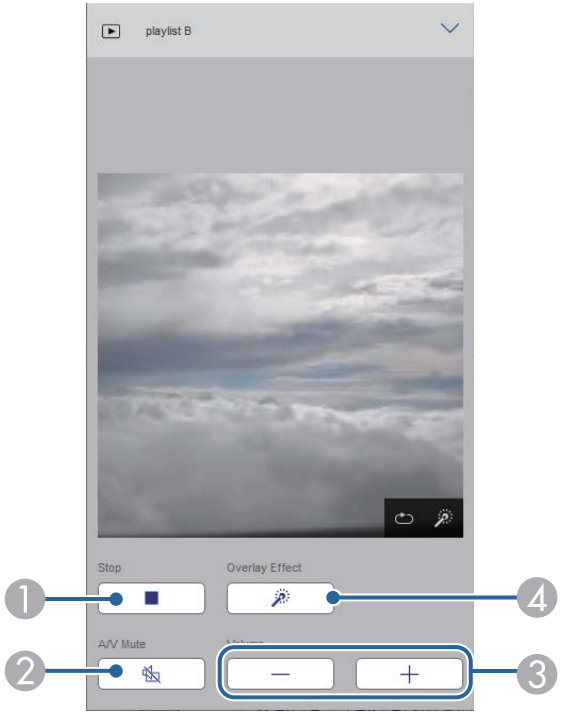

1. Stops projection.

② Turns the video and audio on or off temporarily. However, the audio and video continue to run so you cannot resume projection at the point you activated this function.

③ Adjusts the speaker volume.

④ Opens the **Effects** screen. You can select preset effects or select individual brightness, color, and shape effect filters.

Playlist (only in Content Playback mode)

Options on the **Playlist** screen allow you to select the playlist you want to play from the list, and create or edit playlists.

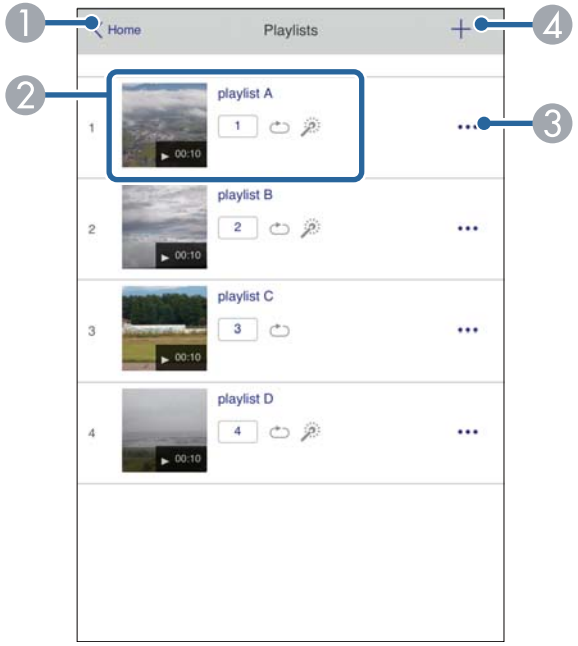

① Returns to the **Epson Web Control** screen.

② Starts projecting the playlist.

The icons indicate the playlist settings.

: Number assigned to your favorite playlists

: Repeat playback has been applied

: Overlay effects have been applied

③ Opens the menu that allows you to edit, copy, register to your favorites, or delete the playlist.

When you select **Edit** or **Duplicate**, the **Edit Playlist** screen is displayed.

④ Opens the **New Playlist** screen where you can create a new playlist.

New Playlist/Edit Playlist screen (only in Content Playback mode)

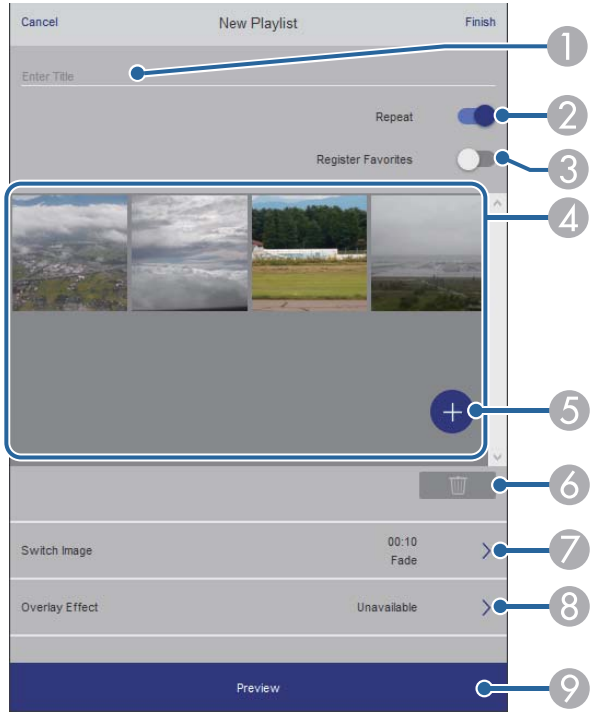

1. Edits the playlist name.
2. Selects whether to enable repeat playback or not.
3. Registers the playlist as favorites.

   When registering favorites, you can quickly start playback of the favorite playlist using the **Remote** screen or the remote control.
4. Displays the images or movies you have added to the playlist. The playlist plays the images or movies in order.
5. Adds images or movies to the playlist.
6. Deletes images or movies from the list.
7. Opens the **Switch Image** screen.

   You can specify the time interval to switch to the next image file. You can also select a transition effect.
8. Opens the **Effects** screen.

   You can add predefined color and shape effect filters to a playlist. You can also create a customized effect.
9. Previews the playlist.

USB Memory Device (only in Content Playback mode)

Options on the **USB Memory Device** screen allow you to upload data for a playlist to the USB flash drive or delete the data on the USB flash drive.

> You can upload .avi, .jpeg (.jpg), .png, .bmp, or .gif files.
>
> If you want to add the .mp4 and .mov files to the playlist, use the Epson Projector Content Manager software or the Epson Creative Projection app.

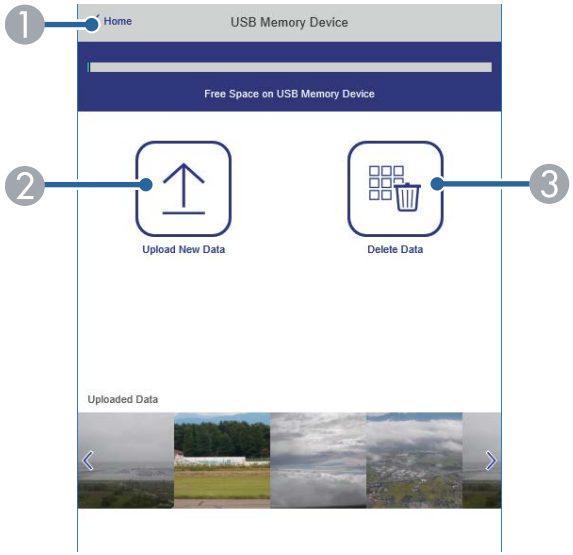

1. Returns to the **Epson Web Control** screen.
2. Copies images or movies you want to add to playlists to a USB flash drive.
3. Deletes images or movies on the USB flash drive.

Time Table (only in Content Playback mode)

Options on the **Time Table** screen allow you to enable or disable the specified time table features.

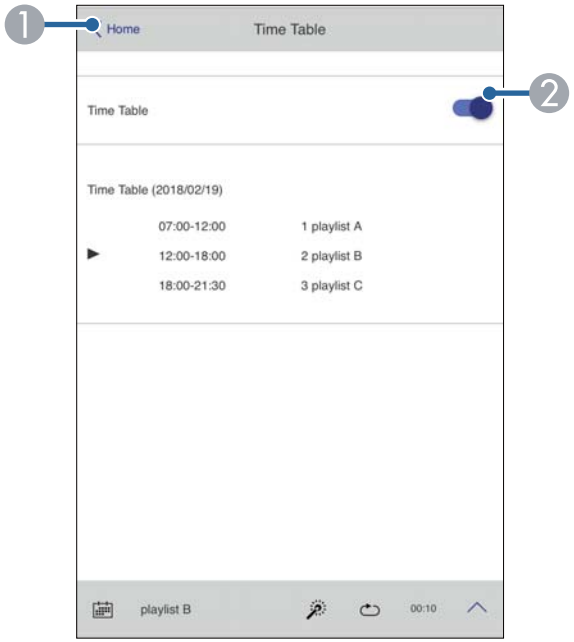

1. Returns to the **Epson Web Control** screen.
2. Turns the time table on or off.

You can specify when each playlist starts and finishes using the time table feature in the Epson Projector Content Manager software.

For details, see the *Epson Projector Content Manager Operation Guide*.

Maintaining the Projector

Follow the instructions in these sections to maintain your projector.

Related Links

- "Projector Maintenance" p.155
- "Cleaning the Lens" p.156
- "Cleaning the Projector Case" p.157
- "Cleaning the Air Intake Vents " p.158

You may need to clean the projector's lens periodically, and clean the air vents to prevent the projector from overheating due to blocked ventilation.

You can replace the following parts for this projector:

- Batteries for the remote control
- Lens unit

If any other part needs replacing, contact Epson or an authorized Epson servicer.

⚠ Warning

Before cleaning any part of the projector, turn it off and unplug the power cord. Never open any cover on the projector, except as specifically explained in this manual. Dangerous electrical voltages in the projector can injure you severely.

Cleaning the Lens

Clean the projector's lens periodically, or whenever you notice dust or smudges on the surface.

- To remove dust or smudges, gently wipe the lens with clean and dry lens-cleaning paper.
- If the lens is dusty, blow off dust using a blower, and then wipe the lens.

⚠ Warning

- Before cleaning the lens, turn off the projector and unplug the power cord.
- Do not use any flammable gas sprays such as air dusters to blow off dust. The high heat generated by the projector may cause a fire.

Attention

- Do not wipe the lens right after you turn off the projector. Doing so could damage the lens.
- Do not use any harsh materials to clean the lens and do not subject the lens to any impacts; otherwise, it could be damaged.

Cleaning the Projector Case

Before cleaning the projector case, turn off the projector and unplug the power cord.

- To remove dust or dirt, use a soft, dry, lint-free cloth.
- To remove stubborn dirt, use a soft cloth moistened with water and mild soap. Do not spray liquid directly on the projector.

Attention

Do not use wax, alcohol, benzene, paint thinner, or other chemicals to clean the projector case. These can damage the case. Do not use canned air, or the gases may leave a flammable residue.

Cleaning the Air Intake Vents

Clean the projector's air intake vents periodically, or whenever you notice dust on the surface of the vents to prevent the projector from overheating due to blocked ventilation.

1. Turn off the projector and unplug the power cord.
2. Carefully remove the dust using a vacuum cleaner or a brush.

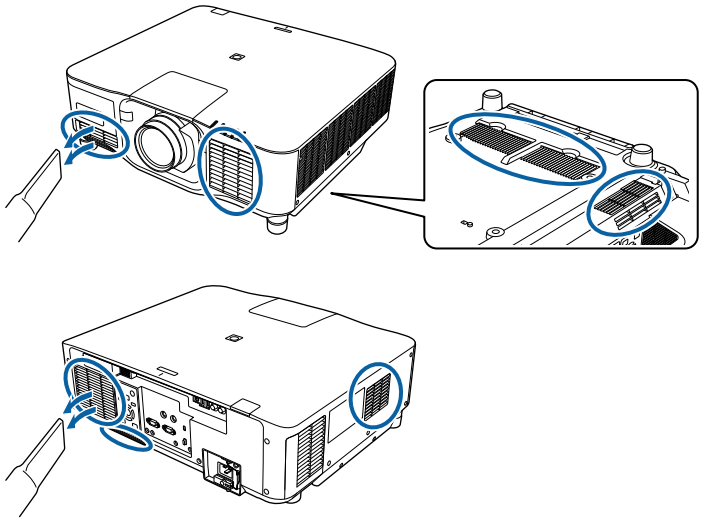

Solving Problems

Check the solutions in these sections if you have any problems using the projector.

Related Links

- "Projection Problems" p.160
- "Projector Indicator Status" p.161
- "Projector Status Display Messages" p.164
- "Solving Image or Sound Problems" p.169
- "Solving Projector or Remote Control Operation Problems" p.175
- "Solutions to Problems in Content Playback Mode" p.177
- "Solving Network Problems" p.178

If the projector is not working properly, turn it off, unplug it, and then plug it back in and turn it on.

If this does not solve the problem, check the following:

- The indicators on the projector may indicate the problem.
- The Help option on the Home screen can display information about common problems, if the projector is operating.
- The solutions in this manual can help you solve many problems.

If none of these solutions help, contact Epson for technical support.

The indicators on the projector indicate the projector status and let you know when a problem occurs. Check the status and color of the indicators and then refer to this table for a solution.

- If the indicators display a pattern not listed in the table below, turn the projector off, unplug it, and contact Epson for help.
- When the **Indicators** setting is set to **Off** in the projector's **Extended** menu, all indicators are off under normal projection conditions.

  ☛ **Extended** > **Operation** > **Advanced** > **Indicators**

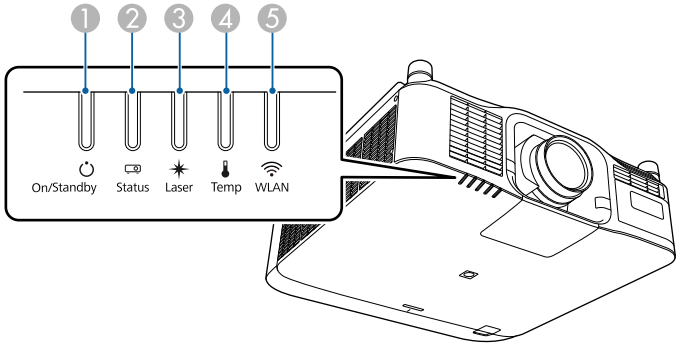

1. On/Standby (power) indicator
2. Status indicator
3. Laser indicator
4. Temp (temperature) indicator
5. WLAN (wireless LAN) indicator

Projector status

Indicator and status	Problem and solutions
Power: Lit blue Status: Lit blue Laser: Indicator status varies Temp: Off	Normal operation.
Power: Lit blue Status: Flashing blue Laser: Indicator status varies Temp: Off	Warming up. When warming up, wait about 30 seconds for an image to appear. All buttons are disabled during warm-up.
Power: Lit blue Status: Flashing blue Laser: Off Temp: Off	Shutting down or cooling down. All buttons are disabled during shutting down and cooling down.
Power: Lit blue Status: Off Laser: Off Temp: Off	Standby, sleep mode, or monitoring. When you press the power button, projection starts.
Power: Flashing blue Status: Off Laser: Off Temp: Off	Preparing for the following functions. All features are disabled. • Monitoring • Quick Startup • USB Power
Power: Lit blue Status: Lit blue Laser: Flashing blue Temp: Off	**EB-PU2220B:** The shutter function is activated. **EB-PU2120W:** A/V Mute is in progress.

Indicator and status	Problem and solutions
Power: Indicator status varies Status: Flashing blue Laser: Flashing orange Temp: Indicator status varies	Refresh Mode is in progress. ☛ **Reset** > **Refresh Mode**
Power: Flashing blue Status: Lit blue Laser: Flashing orange Temp: Off	Projector is operating at low voltage. The projector is operating at a power supply of 100 to 120 V.
Power: Flashing blue Status: Indicator status varies Laser: Indicator status varies Temp: Flashing orange	Projector is too hot. • Make sure the vents are clear and that the projector is not installed in a location near objects that prevent air flow, such as on a shelf or enclosed area. • Make sure the environmental temperature is not too hot.
Power: Off Status: Flashing blue Laser: Off Temp: Lit orange	Projector has overheated and turned off. Leave it turned off to cool down for 5 minutes. • Make sure the vents are clear and that the projector is not installed in a location near objects that prevent air flow, such as on a shelf or enclosed area. • Make sure the environmental temperature is not too hot. • If operating the projector at high altitude, set the **High Altitude Mode** setting to **On** in the projector's menu. ☛ **Extended** > **Operation** > **High Altitude Mode** • If the problem persists, unplug the projector and contact Epson for help.

Indicator and status	Problem and solutions
Power: Flashing blue Status: Indicator status varies Laser: Flashing orange Temp: Indicator status varies	Laser warning Turn the projector off, unplug it, and contact Epson for help.
Power: Flashing blue Status: Indicator status varies Laser: Flashing orange Temp: Indicator status varies	Lens warning An unsupported lens is attached; remove the unsupported lens and attach a lens that is supported.
Power: Flashing blue Status: Indicator status varies Laser: Flashing orange Temp: Flashing orange	Shutter warning (EB-PU2220B) Turn the projector off, unplug it, and contact Epson for help.
Power: Off Status: Flashing blue Laser: Lit orange Temp: Off	Laser or retardation plate has a problem. Turn the projector off, unplug it, and contact Epson for help.
Power: Off Status: Flashing blue Laser: Off Temp: Flashing orange	A fan or sensor has a problem. Turn the projector off, unplug it, and contact Epson for help.
Power: Off Status: Flashing blue Laser: Flashing orange Temp: Off	Internal projector error Turn the projector off, unplug it, and contact Epson for help.

Indicator and status	Problem and solutions
Power: Off Status: Flashing blue Laser: Lit orange Temp: Lit orange	Lens Shift error Supply Voltage error Turn the projector off, unplug it, and contact Epson for help.
Power: Off Status: Flashing blue Laser: Lit orange Temp: Lit orange	A lens has a problem or no lens is installed. • Attach a lens. • If the lens is already attached, remove it and then reattach it. • If the problem persists, unplug the projector and contact Epson for help.
Power: Indicator status varies Status: Indicator status varies Laser: Flashing orange Temp: Indicator status varies	The projector is unable to maintain constant brightness and the setting is disabled. ☛ **Settings** > **Brightness Settings** > **Constant Brightness**
Power: Off Status: Flashing blue Laser: Off Temp: Flashing orange	Cooling system error Turn the projector off, unplug it, and contact Epson for help.
Power: Off Status: Flashing blue Laser: Flashing orange Temp: Flashing orange	Shutter error (EB-PU2220B) Turn the projector off, unplug it, and contact Epson for help.
Power: Off Status: Flashing blue Laser: Lit orange Temp: Off	Upper case open error Turn the projector off, unplug it, and contact Epson for help.

Wireless LAN status

Wireless LAN indicator status	Problem and solutions
Lit blue	Wireless LAN is available.
Flashing blue (quickly)	Connecting to a device.
Flashing blue (slowly)	An error has occurred. Turn off the projector and then on again.
Off	Wireless LAN is not available. Make sure the wireless LAN settings are correct.

You can monitor the projector's status and view error information in the projector's **Info** menu.

☛ **Info** > **Status Information**

Categories on the status display let you view information about the projector and its operation.

- Status messages are available only in English.
- Items displayed vary depending on your projector model, the image signal, and the image source.

Status Information **category**

Information	Description
System	See the System status information table.
Source	Displays the source currently being used.
On-ScreenDisplay	Displays the settings for on-screen displays. When turned off, menus or messages are not displayed on the projected images.
A/V Mute	Displays the A/V Mute status (EB-PU2120W).
Shutter	Displays the shutter function status (EB-PU2220B).
Shutter Startup	Displays the shutter Startup setting (EB-PU2220B). ☛ **Extended** > **Operation** > **Shutter Settings**
Shutter Standby	Displays the shutter Standby setting (EB-PU2220B). ☛ **Extended** > **Operation** > **Shutter Settings**
Intake Air Temp	Displays the air intake temperature.
Internal Temp Lv	Displays the projector's internal temperature.

Information	Description
AC Voltage	Monitors the status of the input voltage, and displays a warning or an error when a momentary voltage drop occurs. Warnings and errors indicate the following status: When using 200 V power supply • Warning1: voltage drop (less than 180 V) • Warning2: voltage drop (less than 160 V) • Warning3: instantaneous interruption • Error: power blockade When using 100 V power supply • Warning1: voltage drop (less than 90 V) • Warning3: instantaneous interruption • Error: power blockade When you turn off the projector by shutting off the power outlet (direct shutdown), an error is displayed. This is not an actual error.
ExtCam Status	Displays the operation status of the optional external camera.
Laser Status	Displays the operating status of the light source.

Source **category**

Information	Description
Source	Displays the source currently being used.
Resolution	Displays the resolution of the current input signal.
Color Space	Displays the color space of the current input signal.
H-Frequency	Displays the horizontal frequency of the current input signal.
V-Frequency	Displays the vertical frequency of the current input signal.
Sync Polarity	Displays the sync polarity.

Information	Description
Sync Mode	Displays the sync type.
Detected Mode	Displays the detected mode of the current input signal.
Video Range	Displays the video level of the projector.
Transport	Displays the scanning method.

Signal Information **category**

Information	Description
5V Detect	Displays the detection results of 5V signals.
TMDS Clock	Displays the TMDS frequency of the current input signal.
H-Frequency	Displays the horizontal frequency of the current input signal.
V-Frequency	Displays the vertical frequency of the current input signal.
Stable Time	Displays the amount of operating time since the input source was determined.
HDCP Status	Displays the HDCP status.
HDCP Ver	Displays the HDCP version.
AVI VIC	Displays the VIC information (AVI) of the current input signal.
AVI Checksum	Displays the checksum result for AVI.
AVI Sampling Str	Displays color sampling for AVI.
Signal Mode	Displays the signal mode.
HDR Mode	Displays the HDR mode.
EDID Mode	Displays the EDID mode.
HDBaseT Level	Displays the image signal information from the HDBaseT port.
SDI Link Mode *	Displays the linking type for SDI.
Sync Detect *	Displays the results of signal detection for each 3G/HD/SD SDI port.
PayloadID Detect *	Displays the results of SDI payload ID detection.
Resolution *	Displays the resolution.
Refresh Rate *	Displays the refresh rate for SDI.
Color Sampling *	Displays the color sampling.
Pixel Depth *	Displays the color depth for SDI.
SDI Type *	Displays the type of SDI.
3G Mapping Level *	Displays the mapping level for 3G-SDI.
Color Space *	Displays the color space conversion method.

* Available only for EB-PU2220B.

Network Wired **category**

Information	Description
Projector Name	Displays the name used to identify the projector when connected to a network.
Connection Mode	Displays the connection path for the LAN.
DHCP	Displays the DHCP settings.
IP Display	Displays the IP address display settings.
IP Address	Displays the IP address.
MAC Address	Displays the MAC address.

Network Wireless **category**

Information	Description
Projector Name	Displays the name used to identify the projector when connected to a network.

Information	Description
Connection Mode	Displays the connection mode to use when connecting the projector and a computer over a wireless LAN.
SSID Display	Displays the SSID display settings.
SSID	Displays the SSID.
DHCP	Displays the DHCP settings.
IP Display	Displays the IP address display settings.
IP Address	Displays the IP address.
MAC Address	Displays the MAC address.
Security	Displays the security settings.
Antenna Level	Displays the reception status for Wi-Fi.

Maintenance **category**

Information	Description
Operation Time	Displays the projector's total operation time.
Laser Op. Time	Displays the laser operating time for each Light Source Mode setting.

Version **category**

Information	Description
Serial No.	Displays the projector's serial number.
Main	Display the projector's firmware version information.
Video2	
Sub	
Sub2	
HDMI	
HDMI2	
HDBaseT	
Pixel Shift	

System **status information**

Status	Description
OK	The projector is in normal operating mode.
Warm-up	The projector is warming up.
Standby	The projector is in standby mode.
Cool Down	The projector is cooling down.

Status	Description
Temp Error	A high temperature error occurred. You can check the following status in the Epson Projector Management software or the Projector Config Tool app. • Temp Error 09(AIR) • Temp Error 0C(PS2) • Temp Error 12(PHW) • Temp Error 1D(PS1) • Temp Error 23(PFC1) • Temp Error 24(HDBT) • Temp Error 25(VIC) • Temp Error 26(SML) • Temp Error 2A(LVR) • Temp Error 2B(LVG) • Temp Error 2C(LVB) • Temp Error 2F(LD1) • Temp Error 30(LD2) • Temp Error 34(PS3) • Temp Error 3D(INA1) • Temp Error 46(LLC1) • Temp Error 47(LLC2) • Temp Error 4B(LDDR1) • Temp Error 4C(LDDR2) • Temp Error 4D(LDDR3) • Temp Error 63(RGB-R) • Temp Error 64(RGB-B) • Temp Error FE The device ID number might also be displayed.

Status	Description
Fan Error	A fan error occurred. You can check the following status in the Epson Projector Management software or the Projector Config Tool app. • Fan Error 29(LVR) • Fan Error 2A(LVG) • Fan Error 2B(LVB) • Fan Error 25(ROUT1) • Fan Error 26(ROUT2) • Fan Error 42(ROUT3) • Fan Error 43(ROUT4) • Fan Error 1F(PHW) • Fan Error 07(EX) • Fan Error 14(PS1) • Fan Error 17(PS2) • Fan Error 3D(MA) The device ID number might also be displayed.

Status	Description
Sensor Error	A sensor error occurred. You can check the following status in the Epson Projector Management software or the Projector Config Tool app. • Sensor Error 09(AIR) • Sensor Error 0C(PS2) • Sensor Error 12(PHW) • Sensor Error 1D(PS1) • Sensor Error 23(PFC1) • Sensor Error 24(HDBT) • Sensor Error 25(VIC) • Sensor Error 26(SML) • Sensor Error 2A(LVR) • Sensor Error 2B(LVG) • Sensor Error 2C(LVB) • Sensor Error 2F(LD1) • Sensor Error 30(LD2) • Sensor Error 34(PS3) • Sensor Error 3D(INA1) • Sensor Error 46(LLC1) • Sensor Error 47(LLC2) • Sensor Error 4B(LDDR1) • Sensor Error 4C(LDDR2) • Sensor Error 4D(LDDR3) • Sensor Error 63(RGB-R) • Sensor Error 64(RGB-B) The device ID number might also be displayed.

Status	Description
Internal Error	An internal error occurred. You can check the following status in the Epson Projector Management software or the Projector Config Tool app. • Internal Error 01 • Internal Error 02 • Internal Error 1C • Internal Error 12 • Internal Error 0F • Internal Error 10 • Internal Error 13 • Internal Error 07 • Internal Error 0A • Internal Error 14 • Internal Error 1A The device ID number might also be displayed.
Temp Warning	A high temperature warning occurred.
Lens Shift Error	A lens shift error has occurred.
Lens Error	A lens error has occurred.
Laser Error	A laser error has occurred.
Laser Warning	A laser warning has occurred.
Temp Error FE	A laser error has occurred because the laser temperature is too high.
Temp Warning FE	A laser warning has occurred because the laser temperature is too high.
Pump Error	A pump error has occurred.
Shutter Error	A shutter error has occurred.
Shutter Warning	A shutter warning has occurred.

Check the solutions in these sections if you have any problems with projected images or sound.

Related Links

- "Solutions When No Image Appears" p.169
- "Solutions When "No Signal" Message Appears" p.169
- "Solutions When "Not Supported" Message Appears" p.170
- "Solutions When Only a Partial Image Appears" p.170
- "Solutions When the Image is not Rectangular" p.171
- "Solutions When the Image Contains Noise or Static" p.171
- "Solutions When the Image is Fuzzy or Blurry" p.172
- "Solutions When the Image Brightness or Colors are Incorrect" p.172
- "Solutions When Automatic Adjustments are not Applied Correctly" p.173
- "Solutions When Simple Stacking is not Applied Correctly" p.173
- "Solutions When an Afterimage Remains on the Projected Image" p.174
- "Solutions to Sound Problems" p.174

Solutions When No Image Appears

If no image appears, try the following solutions:

- Press the [A/V Mute] button on the remote control to see if the image was temporarily turned off.
- Make sure all necessary cables are securely connected and the power is on for the projector and connected video sources.
- Press the projector's power button to wake it from standby or sleep mode. Also, check if the connected computer is in sleep mode or displaying a blank screen saver.
- If the projector does not respond when you press the control panel buttons, the buttons may be locked for security. Unlock the buttons in the **Control Panel Lock** setting or use the remote control to turn on the projector.

  ☛ **Settings** > **Lock Setting** > **Control Panel Lock**
- If the projector does not respond when you press any buttons on the projector, an internal error may have occurred in the projector. Contact Epson for help.
- Adjust the **Brightness** setting in the projector's **Image** menu.
- Adjust the brightness of your projector's light source.

  ☛ **Settings** > **Brightness Settings**
- Make sure **Messages** is set to **On** in the projector's **Extended** menu.

  ☛ **Extended** > **Display** > **Messages**
- The projector may not be able to project copyrighted videos that you play back on a computer. For more details, see the manual supplied with the computer.
- For images projected with Windows Media Center, reduce the screen size from full screen mode.
- For images projected from applications using Windows DirectX, turn off DirectX functions.

Solutions When "No Signal" Message Appears

If the **No Signal** message appears, try the following solutions:

- Press the [Search] (remote control) or [Source Search] (control panel) button on the control panel or remote control until you see the image from the source you want.
- Turn on the connected computer or video source, and press play to begin your presentation, if necessary.
- Check that all cables required for projection are securely connected.
- If you are projecting from a laptop computer, make sure it is set up to display on an external monitor.
- If necessary, turn off the projector and the connected computer or video source, and then turn them back on.

- If you are projecting from an HDMI source, replace the HDMI cable with the shorter one.

Related Links
- "Displaying From a Windows Laptop" p.170
- "Displaying From a Mac Laptop" p.170

Displaying From a Windows Laptop

If the message **No Signal** is displayed when projecting from a laptop, you need to set up the Windows laptop to display on an external monitor.

1. Hold down the Windows key and press **P** on your keyboard at the same time, then click **Duplicate**.
2. If the same image is not displayed by the laptop and projector, check the Windows **Display** utility to make sure the external monitor port is enabled and extended desktop mode is disabled.
3. If necessary, check your video card settings and set the multiple display option to **Mirror** or **Duplicate**.

Displaying From a Mac Laptop

If the message **No Signal** is displayed when projecting from a Mac laptop, you need to set up the laptop for mirrored display. (See your laptop manual for details.)

1. Open the **System Preferences** utility and select **Displays**.
2. Select the **Display** or **Color LCD** option, if necessary.
3. Click the **Arrange** or **Arrangement** tab.
4. Select **Mirror Displays**.

Solutions When "Not Supported" Message Appears

If the message **Not supported** is displayed, try the following solutions:

- Make sure the computer's display resolution does not exceed the projector's resolution and frequency limits. If necessary, select a different display resolution for your computer.

Solutions When Only a Partial Image Appears

If only a partial computer image appears, try the following solutions:

- If you are projecting from a computer using a VGA computer cable, press the [Auto] button on the remote control to optimize the image signal.
- Make sure you selected the correct **Screen Type** setting for the screen you are using.

  ☛ **Extended** > **Display** > **Screen** > **Screen Type**

  If there are margins between the edge of the image and the projected screen frame, adjust the position of the image.

  ☛ **Extended** > **Display** > **Screen** > **Screen Position**
- Make sure the **Scale** setting is turned off in the projector's **Signal** menu.
- Try adjusting the image position using the **Position** setting in the projector's **Signal** menu.
- Press the [Aspect] button on the remote control to select a different image aspect ratio.
- Change the **Resolution** setting in the projector's **Signal** menu according to the signal for the connected equipment.

- Change the **Blanking** setting in the projector's **Signal** menu so that the image appears as you expect.
- If you zoomed into or out of the image using the [E-Zoom] buttons, press the [Esc] button until the projector returns to a full display.
- Check your computer display settings to disable dual display and set the resolution within the projector's limits.
- Check the resolution assigned to your presentation files to see if they are created for a different resolution.
- When projecting in Content Playback mode, make sure you are using the appropriate **Overlay Effect** settings.

  ☛ **Settings** > **Content Playback** > **Overlay Effect**
- Make sure you selected the correct **Projection** setting in the projector's **Extended** menu.

Solutions When the Image is not Rectangular

If the projected image is not evenly rectangular, try the following solutions:

- Place the projector directly in front of the center of the screen, facing it squarely, if possible.
- Press the [Geometry] button on the control panel or remote control to adjust the image shape.
- Adjust the **H/V-Keystone** setting to correct the image shape.

  ☛ **Settings** > **Geometry Correction** > **H/V-Keystone**
- Adjust the **Quick Corner** setting to correct the image shape.

  ☛ **Settings** > **Geometry Correction** > **Quick Corner**
- Adjust the **Curved Surface** setting to correct the corners and sides of an image projected on a curved surface with the same radius.

  ☛ **Settings** > **Geometry Correction** > **Corner Wall**
- Adjust the **Corner Wall** setting to correct the corners and sides of an image projected on a curved surface with right angles.

  ☛ **Settings** > **Geometry Correction** > **Curved Surface**
- Adjust the **Point Correction** setting to correct slight distortion which occurs partially.

  ☛ **Settings** > **Geometry Correction** > **Point Correction**

Solutions When the Image Contains Noise or Static

If the projected image contains electronic interference (noise) or static, try the following solutions:

- Check the cables connecting your computer or video source to the projector. They should be:
  - Separated from the power cord to prevent interference
  - Securely connected at both ends
  - Not connected to an extension cable
- Check the settings in the projector's **Signal** menu to make sure they match the video source.
- Adjust the **Image Enhancement** settings in the projector's **Image** menu.

  ☛ **Image** > **Image Enhancement** > **Noise Reduction**

  ☛ **Image** > **Image Enhancement** > **MPEG Noise Reduction**

  ☛ **Image** > **Image Enhancement** > **Deinterlacing**
- Set the **Resolution** setting to **Auto** in the projector's **Signal** menu.
- Select a computer video resolution and refresh rate that are compatible with the projector.
- If you are projecting from a computer using a VGA computer cable, press the [Auto] button on the remote control to automatically adjust the **Tracking** and **Sync.** settings. If the images are not adjusted correctly, manually adjust the **Tracking** and **Sync.** settings in the projector's **Signal** menu.

- If you adjusted the image shape using the projector controls, try decreasing the **Sharpness** setting in the projector's **Image** menu to improve image quality.
- If you connected an extension power cable, try projecting without it to see if it caused interference in the signal.
- Make sure you selected the correct **Video Range** or **EDID** setting in the projector's **Signal** menu, if available for your image source.

  ☛ **Signal** > **Advanced** > **Video Range**

  ☛ **Signal** > **Advanced** > **EDID**

Solutions When the Image is Fuzzy or Blurry

If the projected image is fuzzy or blurry, try the following solutions:

- Adjust the image focus.
- Position the projector close enough to the screen.
- Position the projector so the keystone adjustment angle is not so wide that it distorts the image.
- Clean the projector lens.



To avoid condensation on the lens after bringing the projector in from a cold environment, let the projector warm up to room temperature before using it.

- Adjust the **Sharpness** setting in the projector's **Image** menu to improve image quality.
- If you are projecting from a computer using a VGA computer cable, press the [Auto] button on the remote control to automatically adjust the **Tracking** and **Sync.** settings. If any bands or overall blurriness remain, display a uniformly patterned image on the screen and manually adjust the **Tracking** and **Sync.** settings in the projector's **Signal** menu.
- If you are projecting from a computer, use a lower resolution or select a resolution that matches the projector's native resolution.

Solutions When the Image Brightness or Colors are Incorrect

If the projected image is too dark or light, or the colors are incorrect, try the following solutions:

- Press the [Color Mode] button on the remote control to try different color modes for the image and environment.
- Check your video source settings.
- Adjust the available settings in the projector's **Image** menu for the current input source, such as **Brightness**, **Contrast**, **Tint**, and **Color Saturation**.
- Make sure you selected the correct **Video Range** or **EDID** setting in the projector's **Signal** menu, if available for your image source.

  ☛ **Signal** > **Advanced** > **Video Range**

  ☛ **Signal** > **Advanced** > **EDID**
- Make sure you selected the correct **RGBCMY** setting in the projector's **Image** menu.

  ☛ **Image** > **Advanced** > **RGBCMY**
- Make sure all the cables are securely connected to the projector and your video device. If you connected long cables, try connecting shorter cables.
- Make sure **Brightness Settings** are set correctly.

  ☛ **Settings** > **Brightness Settings**
- Position the projector close enough to the screen.
- When using multiple projectors, make sure **Light Source Calibration** in the **Reset** menu is set correctly in all of the projectors. If light source calibration is performed only in some of the projectors, the white balance and the brightness level of the projected image may differ between the projectors.

Solutions When Automatic Adjustments are not Applied Correctly

If you have problems with automatic adjustments not being applied correctly, try the following solutions:

- Be sure to wait at least 20 minutes after turning on the projector or releasing the shutter before performing automatic adjustments. This gives the projector's temperature a chance to stabilize.
- Check that the camera area is clean.
- Make sure the cable of the optional external camera is securely connected to the projector.
- The optional external camera may be defective. Contact Epson for help.
- Depending on the lens you installed, automatic adjustments may not be available. Automatic adjustment is not available for the following lenses:
  - ELPLL08
- If you are projecting from an analog input source, the changing color and brightness of the image may cause automatic adjustments to not be applied correctly.
- Make sure that a powerful spotlight or source of strong natural light is not shining into the projection environment and interfering with automatic adjustments.
- Check that your image correction and image blending settings are within reasonable ranges. If the projection angle is very large, try turning off the **Geometry Correction** setting or reduce the projection angle. If you are using the **Edge Blending** setting, make sure the blending width is between 15 to 43%.
- If you see an error message during automatic adjustments, check the error codes in the message.

  During Screen Matching:

  - 0101: Measurement value error
  - 0102: Measurement failure
  - 0103: Switch camera failure
  - 0104/0105: Model mismatch
  - 0108: Camera error

  During Color Matching:

  - 0201: Measurement value error
  - 0202: Measurement failure
  - 0203: Switch camera failure
  - 0208: Camera error

  Contact Epson for support for details.

Solutions When Simple Stacking is not Applied Correctly

If you have problems with simple stacking not being applied correctly, try the following solutions:

- Make sure the projectors are placed correctly and connected using a LAN cable.
- Make sure the optional external camera is installed correctly and the cable is securely connected to the projector.
- The optional external camera may be defective. Contact Epson for help.
- Depending on the lens you installed, simple stacking may not be available. Simple stacking is not available for the following lenses:
  - ELPLL08
- Make sure that a powerful spotlight or source of strong natural light is not shining into the projection environment and interfering with simple staking.
- Resize the projection size.

- If you see an error message during the simple stacking process, check the error codes in the message.
  - 0302: Measurement failure
  - 0306: Geometry correction error
  - 0307/0308: The external camera may be defective, or a communication error has occurred.

  Contact Epson for support for details.

Related Links
- "Conditions for Simple Stacking" p.108

Solutions When an Afterimage Remains on the Projected Image

If you see an afterimage in the projected image, use the **Refresh Mode** feature to clear it. Select **Refresh Mode** > **Start** in the projector's **Reset** menu.

Solutions to Sound Problems

If there is no sound or the volume is too low or high, try the following solutions:

- Adjust the projector's volume settings.
- Press the [A/V Mute] button on the remote control to resume video and audio if they were temporarily stopped.
- Check your computer or video source to make sure the volume is turned up and the audio output is set for the correct source.
- Check the audio cable connections between the projector and your video source.
- Make sure any connected audio cables are labeled "No Resistance".
- If you want to use a connected audio source when the projector is off, set the **Standby Mode** option to **Communication On** and make sure the **A/V Settings** options are set correctly in the projector's **Extended** menu.
- If you want to output audio from a connected audio source when the projector does not project any images, select these settings in the projector's menus:
  - Turn off **Quick Startup** in the **Extended** menu.

    ☛ **Extended** > **Operation** > **Quick Startup**
  - Set the **A/V Output** setting to **Always On** in the **Extended** menu.

    ☛ **Extended** > **A/V Settings** > **A/V Output**
- If you do not hear sound from an HDMI source, set the connected device to PCM output.
- When you are connecting the projector to a Mac using an HDMI cable, make sure your Mac supports audio through the HDMI port. If not, you need to connect an audio cable.
- If the volume for the computer is set to the minimum while the projector is set to the maximum, the noise may be mixed. Turn up the computer's volume and turn down the projector's volume. (When you use Epson iProjection (Windows/Mac).)

Check the solutions in these sections if you have problems operating the projector or remote control.

Related Links

- "Solutions to Projector Power or Shut-Off Problems" p.175
- "Solutions to Problems with the Remote Control" p.175
- "Solutions to Password Problems" p.176
- "Solution When "The Battery that Saves Your Clock Settings is Running Low" Message Appears" p.176

Solutions to Projector Power or Shut-Off Problems

If the projector does not turn on when you press the power button or it turns off unexpectedly, try the following solutions:

- Make sure the power cord is securely connected to the projector and to a working electrical outlet.
- If the power button on the remote control does not turn on the projector, check its batteries and make sure at least one of the remote receivers are available in the **Remote Receiver** setting in the projector's **Settings** menu.
- The projector's buttons may be locked for security. Unlock the buttons in the **Control Panel Lock** setting or use the remote control to turn on the projector.
- If the projector's light source turns off unexpectedly, it may have entered sleep mode after a period of inactivity. Perform any operation to wake the projector. To turn off sleep mode, set the **Sleep Mode** setting to **Off**.

  ☛ **Extended** > **Operation** > **Sleep Mode**
- If the projector turns off unexpectedly, the A/V mute timer may be enabled (EB-PU2120W). To turn off the A/V mute timer, set the **A/V Mute Timer** setting to **Off**.

  ☛ **Extended** > **Operation** > **A/V Mute Settings** > **A/V Mute Timer**
- If the projector turns off unexpectedly, the shutter timer may be enabled (EB-PU2220B). To turn off the shutter timer, set the **Shutter Timer** setting to **Off**.

  ☛ **Extended** > **Operation** > **Shutter Settings** > **Shutter Timer**
- If the projector's light source turns off, the status indicator is flashing, and the temp (temperature) indicator is lit, the projector has overheated and turned off.
- The cooling fans may run in standby status depending on the projector settings. Also, when the projector wakes from standby status, the fans may cause an unexpected noise. This is not a malfunction.
- The power cord may be defective. Disconnect the cord and contact Epson for help.

Solutions to Problems with the Remote Control

If the projector does not respond to remote control commands, try the following solutions:

- Check that the remote control batteries are installed correctly and have power. If necessary, replace the batteries.
- Make sure you are operating the remote control within the reception angle and range of the projector.
- Make sure the projector is not warming up or shutting down.
- Check to see if a button on the remote control is stuck down, causing it to enter sleep mode. Release the button to wake the remote control up.
- Strong fluorescent lighting, direct sunlight, or infrared device signals may be interfering with the projector's remote receivers. Dim the lights or move the projector away from the sun or interfering equipment.
- Make sure at least one of the remote receivers are available in the **Remote Receiver** setting in the projector's **Settings** menu.
- If you enabled the remote control button lock, press and hold the [Home] button for about 5 seconds to turn it off.

- If you assigned an ID number to the projector to operate multiple projectors from the remote control, you may need to check or change the ID setting.
- Set the remote control [ID] switch to **Off**. You can operate all of the projectors regardless of the projector ID settings.
- Make sure the projector and the remote control are not connected using the cable. If you leave the cable connected to the projector's Remote port, the remote control cannot control the projector.
- Make sure the **Control Communications** or **Extron XTP** setting in the **Extended** menu is set to **Off** if you are using the remote control connected to the projector's Remote port.

  ☛ **Extended** > **HDBaseT** > **Control Communications**

  ☛ **Extended** > **HDBaseT** > **Extron XTP**
- If you lose the remote control, you can order another one from Epson.

Solutions to Password Problems

If you cannot enter or remember a password, try the following solutions:

- If you have entered an incorrect password too many times and see a message displaying a request code, write down the code and contact Epson for help. Provide the request code and proof of ownership for assistance in unlocking the projector.
- If you lose the remote control you cannot enter a password. Order a new one from Epson.

Attention

If you perform **Reset network settings.** in the projector's **Network** menu, all of the passwords that have been set for the **Network** menu are also reset and you need to set them again. To prevent the passwords from being reset by unauthorized users, set **Network Protection** to **On** in the **Password Protection** menu.

Solution When "The Battery that Saves Your Clock Settings is Running Low" Message Appears

If the message **The battery that saves your clock settings is running low.** is displayed, contact Epson for help.

Solutions to Problems in Content Playback Mode

If you cannot play back a playlist correctly, try the following solutions:

- Make sure **Content Playback** is set to **On**.

  ☛ **Settings** > **Content Playback** > **Content Playback**

- Make sure the USB flash drive contains a playlist.
- Make sure the USB flash drive is directly connected to the projector. Do not use a multi-card reader or a USB hub to expand a USB port.
- If the USB flash drive is partitioned, you may not be able to play back playlists. Delete all of the partitions before saving the playlists on the USB flash drive.
- Do not share a playlist between projectors that are different in resolution. Color and shape effects added by using **Overlay Effect** may not be reproduced correctly.

  ☛ **Settings** > **Content Playback** > **Overlay Effect**

Check the solutions in these sections if you have problems using the projector on a network.

Related Links
- "Solutions When Wireless Authentication Fails" p.178
- "Solutions When You Cannot Access the Projector Through the Web" p.178
- "Solutions When Network Alert E-Mails are not Received" p.178
- "Solutions When the Image Contains Static During Network Projection" p.179
- "Solutions When You Cannot Monitor and Control the Projector over a Network" p.179

Solutions When Wireless Authentication Fails

If you are having trouble with the authentication, try the following solutions:

- If the wireless settings are correct, but authentication fails, you may need to update the **Date & Time** settings.

  ☛ **Extended** > **Operation** > **Date & Time**
- Check the **Security** settings in the projector's **Network** menu.

  ☛ **Network** > **Network Configuration** > **Wireless LAN**
- If the access point security is WPA3-EAP, change the access point setting to WPA2/WPA3-EAP.

Solutions When You Cannot Access the Projector Through the Web

If you are unable to access the projector through a Web browser, make sure you are using the correct ID and password.

- Make sure you use the following user IDs. (You cannot change the user IDs.)
  - To access the **Basic Control** option, enter **EPSONREMOTE**.
  - To access other options and save settings, enter **EPSONWEB**.
- For the password, enter the password set in the projector's **Network** menu. No password is set by default.
- Make sure you have access to the network the projector is on.
- If your Web browser is set up to connect via a proxy server, the **Epson Web Control** screen cannot be displayed. Make settings for a connection without using a proxy server.
- If you set the **Standby Mode** setting to **Communication On** in the projector's menu in standby mode, make sure the network device is turned on. After turning on the network device, turn on the projector.

  ☛ **Extended** > **Standby Mode**

  And connect to a wired LAN, or to a wireless LAN with the **Connection Mode** setting set to **Advanced**.

  ☛ **Network** > **Network Configuration** > **Wireless LAN** > **Connection Mode**



The user ID and password are case sensitive.

Solutions When Network Alert E-Mails are not Received

If you do not receive an e-mail alerting you to problems with a projector over the network, try the following solutions:

- Make sure the projector is turned on and connected to the network correctly. (If an error shuts down the projector, the email may not be delivered.)
- Make sure you set up the projector e-mail alert settings correctly in the projector's network **Notifications** menu or in the network software.
- Set the **Standby Mode** setting to **Communication On** so that the network software can monitor the projector in standby mode.

☛ **Extended** > **Standby Mode**

And connect to a wired LAN, or to a wireless LAN with the **Connection Mode** setting set to **Advanced**.

☛ **Network** > **Network Configuration** > **Wireless LAN** > **Connection Mode**

Solutions When the Image Contains Static During Network Projection

If the projected image contains static during network projection, try the following solutions:

- Check for any obstacles between the access point, the computer, the mobile device, and the projector, and change their positions to improve communication.
- Make sure that the access point, the computer, the mobile device and the projector are not too far apart. Move them closer together and try to connect again.
- Check for interference from other equipment, such as a Bluetooth device or microwave. Move the interfering device farther away or expand your wireless bandwidth.
- Reduce the number of connected devices if the connection speed declines.

Solutions When You Cannot Monitor and Control the Projector over a Network

If you are unable to monitor and control the projector with command communication using ESC/VP.net, set the **Command Communication** setting to **Compatible**.

☛ **Network** > **Network Configuration** > **Others** > **Command Communication**

Appendix

Check these sections for the technical specifications and important notices about your product.

Related Links

- "Optional Accessories and Replacement Parts" p.181
- "Screen Size and Projection Distance" p.183
- "Projector Specifications" p.195
- "Supported Features for Epson Projector Content Manager" p.197
- "List of Safety Symbols and Instructions" p.198
- "Laser Safety Information" p.200
- "Hazard Distance according to IEC62471-5" p.202
- "Notices" p.203

Optional Accessories and Replacement Parts

The following optional accessories and replacement parts are available. Please purchase these products as and when needed.

The following list of optional accessories and replacement parts is current as of: February 2022.

Details of accessories are subject to change without notice and availability may vary depending on the country of purchase.

Related Links
- "Lens" p.181
- "Mounts" p.181
- "External Devices" p.181
- "For Wireless Connection" p.182

Lens

ELPLX02S/02

ELPLX02WS/02W
Ultra short-throw zoom lens.

ELPLU03S

ELPLU04

ELPLU03
Short-throw zoom lens.

ELPLW05

ELPLW08

ELPLW06
Wide-throw zoom lens.

ELPLM08

ELPLM15

ELPLM10

ELPLM11

ELPLM09
Middle-throw zoom lens.

ELPLL08
Long-throw zoom lens.

Mounts

Ceiling Mount ELPMB67
Use when installing the projector on a ceiling or a wall.

Suspension Adapter ELPFP15
Use when installing the projector on a high ceiling.



Special expertise is required to suspend the projector from a ceiling. Contact Epson for help.

External Devices

Document Camera ELPDC21
Use when projecting image such as books, OHP documents, or slides.

External Speaker ELPSP02
External self-powered speaker.

Streaming Media Player ELPAP12
Use this streaming media player to watch online content.

External Camera ELPEC01
Use this to automatically adjust images projected from multiple projectors.

For Wireless Connection

Wireless LAN module ELPAP11

Use this to project images from a computer via a wireless communication.

Wireless Presentation System ELPWP20

Use when directly connecting to Windows/Mac computers and projecting images wirelessly. Includes two wireless transmitters (ELPWT01) and one base unit (ELPBU01).

Check the tables in these sections to determine how far to place the projector from the screen based on the size of the projected image.

Related Links
- "Projection Distance Formula" p.183
- "Projection Distance" p.187

Projection Distance Formula

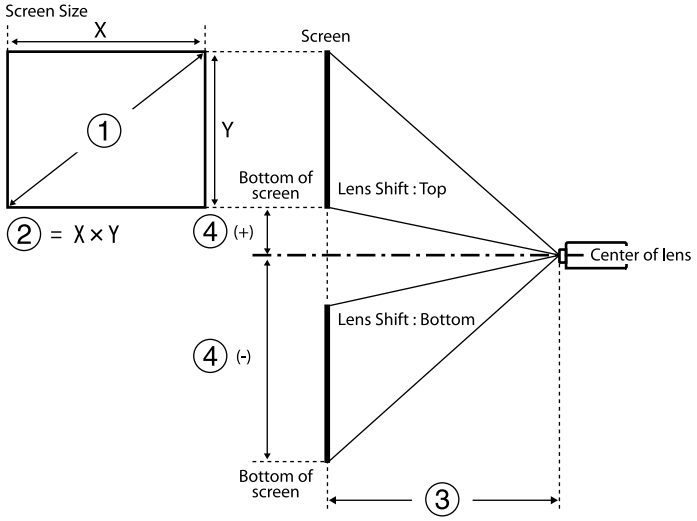

1. Screen size (inches)
2. Screen size (Width × Height)
3. Projection distance (Minimum: Wide to Maximum: Tele)
4. Distance from the center of the lens to the bottom of the screen

16:10

Lens	Projection distance formula		Throw ratio (projection distance/x)
ELPLX02S ELPLX02WS ELPLX02 ELPLX02W	-	③ (cm) = ① (inches) × 0.77 - 3.40	0.35
ELPLU03 ELPLU03S	Minimum	③ (cm) = ① (inches) × 1.05 - 3.49	0.48 - 0.57
	Maximum	③ (cm) = ① (inches) × 1.26 - 3.28	
ELPLU04	Minimum	③ (cm) = ① (inches) × 1.42 - 5.65	0.64 - 0.77
	Maximum	③ (cm) = ① (inches) × 1.71 - 5.52	
ELPLW05	Minimum	③ (cm) = ① (inches) × 1.70 - 7.86	0.77 - 1.07
	Maximum	③ (cm) = ① (inches) × 2.35 - 5.80	
ELPLW08	Minimum	③ (cm) = ① (inches) × 1.88 - 3.92	0.86 - 1.21
	Maximum	③ (cm) = ① (inches) × 2.64 - 5.10	
ELPLW06	Minimum	③ (cm) = ① (inches) × 2.61 - 7.51	1.19 - 1.62
	Maximum	③ (cm) = ① (inches) × 3.55 - 6.99	
ELPLM08	Minimum	③ (cm) = ① (inches) × 2.31 - 5.10	1.06 - 1.69
	Maximum	③ (cm) = ① (inches) × 3.70 - 4.54	
ELPLM09 ELPLM15	Minimum	③ (cm) = ① (inches) × 3.45 - 8.18	1.57 - 2.56
	Maximum	③ (cm) = ① (inches) × 5.57 - 8.02	
ELPLM10	Minimum	③ (cm) = ① (inches) × 5.33 - 13.21	2.42 - 3.71
	Maximum	③ (cm) = ① (inches) × 8.10 - 13.08	

Lens	Projection distance formula		Throw ratio (projection distance/x)
ELPLM11	Minimum	❸ (cm) = ❶ (inches) × 7.81 - 23.86	3.54 - 5.41
	Maximum	❸ (cm) = ❶ (inches) × 11.83 - 23.55	
ELPLL08	Minimum	❸ (cm) = ❶ (inches) × 11.59 - 31.52	5.27 - 7.41
	Maximum	❸ (cm) = ❶ (inches) × 16.21 - 31.81	

Lens	Distance from the center of the lens to the base of the screen
ELPLX02S ELPLX02WS ELPLX02 ELPLX02W	❹ (+) (cm) = ❶ (inches) × 0.27 ❹ (-) (cm) = ❶ (inches) × -0.07
ELPLU03 ELPLU03S ELPLW05 ELPLM08	❹ (+) (cm) = ❶ (inches) × -0.35 ❹ (-) (cm) = ❶ (inches) × -1.00
ELPLU04 ELPLW08 ELPLW06 ELPLM09 ELPLM15 ELPLM10 ELPLM11 ELPLL08	❹ (+) (cm) = ❶ (inches) × 0.14 ❹ (-) (cm) = ❶ (inches) × -1.48

16:9

Lens	Projection distance formula		Throw ratio (projection distance/x)
ELPLX02S ELPLX02WS ELPLX02 ELPLX02W	-	❸ (cm) = ❶ (inches) × 0.79 - 3.40	0.35
ELPLU03 ELPLU03S	Minimum	❸ (cm) = ❶ (inches) × 1.08 - 3.49	0.48 - 0.57
	Maximum	❸ (cm) = ❶ (inches) × 1.29 - 3.28	
ELPLU04	Minimum	❸ (cm) = ❶ (inches) × 1.46 - 5.65	0.64 - 0.77
	Maximum	❸ (cm) = ❶ (inches) × 1.76 - 5.52	
ELPLW05	Minimum	❸ (cm) = ❶ (inches) × 1.75 - 7.86	0.77 - 1.07
	Maximum	❸ (cm) = ❶ (inches) × 2.42 - 5.80	
ELPLW08	Minimum	❸ (cm) = ❶ (inches) × 1.93 - 3.92	0.86 - 1.21
	Maximum	❸ (cm) = ❶ (inches) × 2.72 - 5.10	
ELPLW06	Minimum	❸ (cm) = ❶ (inches) × 2.69 - 7.51	1.19 - 1.62
	Maximum	❸ (cm) = ❶ (inches) × 3.65 - 6.99	
ELPLM08	Minimum	❸ (cm) = ❶ (inches) × 2.38 - 5.10	1.06 - 1.69
	Maximum	❸ (cm) = ❶ (inches) × 3.81 - 4.54	
ELPLM09 ELPLM15	Minimum	❸ (cm) = ❶ (inches) × 3.55 - 8.18	1.57 - 2.56
	Maximum	❸ (cm) = ❶ (inches) × 5.73 - 8.02	
ELPLM10	Minimum	❸ (cm) = ❶ (inches) × 5.47 - 13.21	2.42 - 3.71
	Maximum	❸ (cm) = ❶ (inches) × 8.32 - 13.08	

Lens	Projection distance formula		Throw ratio (projection distance/x)
ELPLM11	Minimum	❸ (cm) = ❶ (inches) × 8.03 - 23.86	3.54 - 5.41
	Maximum	❸ (cm) = ❶ (inches) × 12.16 - 23.55	
ELPLL08	Minimum	❸ (cm) = ❶ (inches) × 11.92 - 31.52	5.27 - 7.41
	Maximum	❸ (cm) = ❶ (inches) × 16.66 - 31.81	

Lens	Distance from the center of the lens to the base of the screen
ELPLX02S ELPLX02WS ELPLX02 ELPLX02W	❹ (+) (cm) = 0 to ❶ (inches) × 0.35
ELPLU03 ELPLU03S ELPLW05 ELPLM08	❹ (+) (cm) = ❶ (inches) × -0.29 ❹ (-) (cm) = ❶ (inches) × -0.96
ELPLU04 ELPLW08 ELPLW06 ELPLM09 ELPLM15 ELPLM10 ELPLM11 ELPLL08	❹ (+) (cm) = ❶ (inches) × 0.21 ❹ (-) (cm) = ❶ (inches) × -1.45

4:3

Lens	Projection distance formula		Throw ratio (projection distance/x)
ELPLX02S ELPLX02WS ELPLX02 ELPLX02W	-	❸ (cm) = ❶ (inches) × 0.87 - 3.40	0.42
ELPLU03 ELPLU03S	Minimum	❸ (cm) = ❶ (inches) × 1.19 - 3.49	0.57 - 0.69
	Maximum	❸ (cm) = ❶ (inches) × 1.43 - 3.28	
ELPLU04	Minimum	❸ (cm) = ❶ (inches) × 1.61 - 5.65	0.77 - 0.93
	Maximum	❸ (cm) = ❶ (inches) × 1.93 - 5.52	
ELPLW05	Minimum	❸ (cm) = ❶ (inches) × 1.93 - 7.86	0.92 - 1.29
	Maximum	❸ (cm) = ❶ (inches) × 2.66 - 5.80	
ELPLW08	Minimum	❸ (cm) = ❶ (inches) × 2.13 - 3.92	1.03 - 1.46
	Maximum	❸ (cm) = ❶ (inches) × 2.99 - 5.10	
ELPLW06	Minimum	❸ (cm) = ❶ (inches) × 2.96 - 7.51	1.42 - 1.95
	Maximum	❸ (cm) = ❶ (inches) × 4.02 - 6.99	
ELPLM08	Minimum	❸ (cm) = ❶ (inches) × 2.62 - 5.10	1.27 - 2.03
	Maximum	❸ (cm) = ❶ (inches) × 4.19 - 4.54	
ELPLM09 ELPLM15	Minimum	❸ (cm) = ❶ (inches) × 3.91 - 8.18	1.89 - 3.07
	Maximum	❸ (cm) = ❶ (inches) × 6.31 - 8.02	
ELPLM10	Minimum	❸ (cm) = ❶ (inches) × 6.03 - 13.21	2.91 - 4.45
	Maximum	❸ (cm) = ❶ (inches) × 9.17 - 13.08	

Lens	Projection distance formula		Throw ratio (projection distance/x)
ELPLM11	Minimum	❸ (cm) = ❶ (inches) × 8.84 - 23.86	4.25 - 6.49
	Maximum	❸ (cm) = ❶ (inches) × 13.39 - 23.55	
ELPLL08	Minimum	❸ (cm) = ❶ (inches) × 13.13 - 31.52	6.32 - 8.89
	Maximum	❸ (cm) = ❶ (inches) × 18.35 - 31.81	

Lens	Distance from the center of the lens to the base of the screen
ELPLX02S ELPLX02WS ELPLX02 ELPLX02W	❹ (+) (cm) = ❶ (inches) × 0.30 ❹ (-) (cm) = ❶ (inches) × -0.08
ELPLU03 ELPLU03S ELPLW05 ELPLM08	❹ (+) (cm) = ❶ (inches) × -0.40 ❹ (-) (cm) = ❶ (inches) × -1.13
ELPLU04 ELPLW08 ELPLW06 ELPLM09 ELPLM15 ELPLM10 ELPLM11 ELPLL08	❹ (+) (cm) = ❶ (inches) × 0.15 ❹ (-) (cm) = ❶ (inches) × -1.68

21:9

Lens	Projection distance formula		Throw ratio (projection distance/x)
ELPLX02S ELPLX02WS ELPLX02 ELPLX02W	-	❸ (cm) = ❶ (inches) × 0.84 - 3.40	0.35
ELPLU03 ELPLU03S	Minimum	❸ (cm) = ❶ (inches) × 1.14 - 3.49	0.48 - 0.57
	Maximum	❸ (cm) = ❶ (inches) × 1.36 - 3.28	
ELPLU04	Minimum	❸ (cm) = ❶ (inches) × 1.54 - 5.65	0.64 - 0.77
	Maximum	❸ (cm) = ❶ (inches) × 1.85 - 5.52	
ELPLW05	Minimum	❸ (cm) = ❶ (inches) × 1.85 - 7.86	0.77 - 1.07
	Maximum	❸ (cm) = ❶ (inches) × 2.55 - 5.80	
ELPLW08	Minimum	❸ (cm) = ❶ (inches) × 2.04 - 3.92	0.86 - 1.21
	Maximum	❸ (cm) = ❶ (inches) × 2.87 - 5.10	
ELPLW06	Minimum	❸ (cm) = ❶ (inches) × 2.83 - 7.51	1.19 - 1.62
	Maximum	❸ (cm) = ❶ (inches) × 3.85 - 6.99	
ELPLM08	Minimum	❸ (cm) = ❶ (inches) × 2.51 - 5.10	1.06 - 1.69
	Maximum	❸ (cm) = ❶ (inches) × 4.01 - 4.54	
ELPLM09 ELPLM15	Minimum	❸ (cm) = ❶ (inches) × 3.74 - 8.18	1.57 - 2.56
	Maximum	❸ (cm) = ❶ (inches) × 6.04 - 8.02	
ELPLM10	Minimum	❸ (cm) = ❶ (inches) × 5.77 - 13.21	2.42 - 3.71
	Maximum	❸ (cm) = ❶ (inches) × 8.78 - 13.08	

Lens	Projection distance formula		Throw ratio (projection distance/x)
ELPLM11	Minimum	❸ (cm) = ❶ (inches) × 8.46 - 23.86	3.54 - 5.41
	Maximum	❸ (cm) = ❶ (inches) × 12.82 - 23.55	
ELPLL08	Minimum	❸ (cm) = ❶ (inches) × 12.57 - 31.52	5.27 - 7.41
	Maximum	❸ (cm) = ❶ (inches) × 17.57 - 31.81	

Lens	Distance from the center of the lens to the base of the screen
ELPLX02S ELPLX02WS ELPLX02 ELPLX02W	❹ (+) (cm) = ❶ (inches) × 0.16 ❹ (-) (cm) = ❶ (inches) × 0.52
ELPLU03 ELPLU03S ELPLW05 ELPLM08	❹ (+) (cm) = ❶ (inches) × -0.85 ❹ (-) (cm) = ❶ (inches) × -0.15
ELPLU04 ELPLW08 ELPLW06 ELPLM09 ELPLM15 ELPLM10 ELPLM11 ELPLL08	❹ (+) (cm) = ❶ (inches) × 0.38 ❹ (-) (cm) = ❶ (inches) × -1.38

Projection Distance

The projection distances are approximate values.

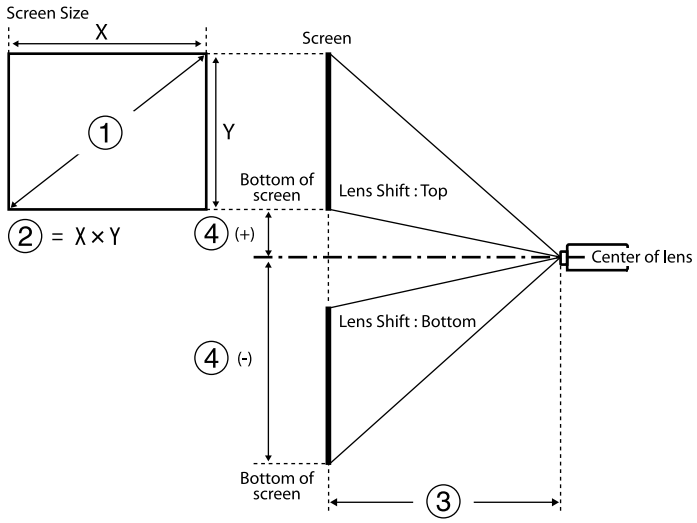

❶ Screen size (inches)
❷ Screen size (Width × Height) (cm)
❸ Projection distance (Minimum: Wide to Maximum: Tele) (cm)
❹ Distance from the center of the lens to the bottom of the screen (cm)

When you project an over 500 inches image, the image may become a little bit blurred.

16:10

ELPLX02S/ELPLX02WS/ELPLX02/ELPLX02W

❶	❷	❸	❹
Inches	Width × Height	ELPLX02S/ELPLX02WS/ELPLX02/ ELPLX02W	
100	215 × 135	74	-7 - 27
120	258 × 162	89	-8 - 32
150	323 × 202	112	-10 - 40

❶	❷	❸	❹
Inches	Width × Height	ELPLX02S/ELPLX02WS/ELPLX02/ ELPLX02W	
200	431 × 269	151	-13 - 54
300	646 × 404	228	-20 - 81
400	862 × 538	306	-27 - 108
500	1077 × 673	383	-34 - 135
600	1292 × 808	460	-40 - 162
800	1723 × 1077	615	-54 - 215
1000	2154 × 1346	769	-67 - 269

16:9

ELPLX02S/ELPLX02WS/ELPLX02/ELPLX02W

❶	❷	❸	❹
Inches	Width × Height	ELPLX02S/ELPLX02WS/ELPLX02/ ELPLX02W	
98	217 × 122	74	0 - 34
100	221 × 125	76	0 - 35
120	266 × 149	92	0 - 42
150	332 × 187	116	0 - 52
200	443 × 249	155	0 - 69
300	664 × 374	235	0 - 104
400	886 × 498	314	0 - 138
500	1107 × 623	394	0 - 173
600	1328 × 747	473	0 - 208
800	1771 × 996	632	0 - 277

4:3

ELPLX02S/ELPLX02WS/ELPLX02/ELPLX02W

❶	❷	❸	❹
Inches	Width × Height	ELPLX02S/ELPLX02WS/ELPLX02/ ELPLX02W	
89	181 × 136	74	-7 - 27
100	203 × 152	84	-8 - 30
120	244 × 183	102	-9 - 37
150	305 × 229	128	-11 - 46
200	406 × 305	172	-15 - 61
300	610 × 457	259	-23 - 91
400	813 × 610	346	-30 - 122
500	1016 × 762	434	-38 - 152
600	1219 × 914	521	-46 - 183
800	1626 × 1219	696	-61 - 244

21:9

ELPLX02S/ELPLX02WS/ELPLX02/ELPLX02W

❶	❷	❸	❹
Inches	Width × Height	ELPLX02S/ELPLX02WS/ELPLX02/ ELPLX02W	
98	229 × 98	79	15 - 51
100	233 × 100	80	16 - 52
120	280 × 120	97	19 - 63
150	350 × 150	122	23 - 78
200	467 × 200	164	31 - 104

❶	❷	❸	❹
Inches	Width × Height	ELPLX02S/ELPLX02WS/ELPLX02/ ELPLX02W	
300	700 × 300	248	47 - 156
400	934 × 400	332	63 - 208
500	1167 × 500	415	78 - 261
600	1401 × 600	499	94 - 313
800	1868 × 800	666	125 - 417

16:10

ELPLU03/ELPLU03S/ELPLU04/ELPLW05/ELPLW08

❶	❷	❸				❹	
Inches	Width × Height	ELPLU03 ELPLU03S	ELPLU04	ELPLW05	ELPLW08	ELPLU03 ELPLU03S ELPLW05	ELPLU04 ELPLW08
60	129 × 81	-	80 - 97	94 - 135	109 - 154	-60 - -21 *	-89 - 8
70	151 × 94	-	-	111 - 159	-	-70 to -24 *	-
80	172 × 108	80 - 97	108 - 131	129 - 182	146 - 206	-80 - -28	-119 - 11
100	215 × 135	101 - 123	136 - 165	163 - 229	184 - 259	-100 - -35	-148 - 14
120	258 × 162	122 - 148	165 - 199	197 - 276	222 - 312	-120 - -42	-178 - 16
150	323 × 202	154 - 186	207 - 251	248 - 347	278 - 391	-150 - -52	-222 - 20

❶	❷	❸				❹	
Inches	Width × Height	ELPLU03 ELPLU03S	ELPLU04	ELPLW05	ELPLW08	ELPLU03 ELPLU03S ELPLW05	ELPLU04 ELPLW08
200	431 × 269	206 - 249	278 - 336	333 - 464	372 - 524	-199 - -70	-296 - 27
250	538 × 337	259 - 312	-	-	-	-249 - -87**	-
300	646 × 404	311 - 374	420 - 507	-	560 - 788	-299 - -105**	-444 - 41
500	1077 × 673	521 - 626	704 - 848	844 - 1169	936 - 1317	-499 - -175	-741 - 68
800	1723 ×1077	836 - 1004	1131 - 1361	1356 - 1874	1500 - 2110	-798 - -279	-1185 - 108
1000	2154 ×1346	1045 - 1256	1415 - 1702	1697 - 2344	1876 - 2639	-997 - -349	-1482 - 135

* Except for ELPLU03/ELPLU03S.

** Except for ELPLW05.

ELPLW06/ELPLM08

❶	❷	❸		❹	
Inches	Width × Height	ELPLW06	ELPLM08	ELPLW06	ELPLM08
60	129 × 81	149 - 206	-	-89 - 8	-
80	172 × 108	202 - 277	180 - 292	-119 - 11	-80 - -28
100	215 × 135	254 - 348	226 - 366	-148 - 14	-100 - -35
120	258 × 162	306 - 419	273 - 440	-178 - 16	-120 - -42

❶	❷	❸		❹	
Inches	Width × Height	ELPLW06	ELPLM08	ELPLW06	ELPLM08
150	323 × 202	385 - 526	342 - 551	-222 - 20	-149 - -53
200	431 × 269	515 - 703	458 - 736	-296 - 27	-199 - -70
250	538 × 337	-	573 - 921	-	-249 - -88
300	646 × 404	777 - 1058	689 - 1106	-444 - 41	-299 - -105
500	1077 × 673	1299 - 1769	1152 - 1847	-741 - 68	-498 - -175
800	1723 ×1077	2084 - 2834	1846 - 2957	-1185 - 108	-797 - -280
1000	2154 ×1346	2606 - 3544	2309 - 3698	-1482 - 135	-996 - -350

ELPLM09/ELPLM15/ELPLM10/ELPLM11/ELPLL08

❶	❷	❸				❹
Inches	Width × Height	ELPLM09 ELPLM15	ELPLM10	ELPLM11	ELPLL08	
60	129 × 81	199 - 326	306 - 473	445 - 686	664 - 941	-89 - 8
80	172 × 108	268 - 438	413 - 635	601 - 923	896 - 1265	-119 - 11
100	215 × 135	337 - 549	519 - 797	757 - 1160	1128 - 1589	-148 - 14
120	258 × 162	406 - 661	626 - 959	913 - 1396	1360 - 1913	-178 - 16
150	323 × 202	509 - 828	786 - 1202	1147 - 1751	1708 - 2399	-222 - 20
200	431 × 269	682 - 1106	1052 - 1607	1538 - 2343	2287 - 3209	-296 - 27
300	646 × 404	1027 - 1663	1585 - 2417	2319 - 3526	3447 - 4830	-444 - 41
500	1077 × 673	1717 - 2777	2650 - 4036	3881 - 5892	5765 - 8071	-741 - 68

❶	❷	❸				❹
Inches	Width × Height	ELPLM09 ELPLM15	ELPLM10	ELPLM11	ELPLL08	
800	1723 ×1077	2753 - 4449	4248 - 6466	6223 - 9441	9244 - 12933	-1185 - 108
1000	2154 ×1346	3443 - 5563	5313 - 8086	7785 - 11807	11562 - 16174	-1482 - 135

16:9

ELPLU03/ELPLU03S/ELPLU04/ELPLW05/ELPLW08

❶	❷	❸				❹	
Inches	Width × Height	ELPLU03 ELPLU03S	ELPLU04	ELPLW05	ELPLW08	ELPLU03 ELPLU03S ELPLW05	ELPLU04 ELPLW08
60	133 × 75	-	82 - 100	97 - 139	112 - 158	-57 - -17*	-87 - 13
70	155 × 87	-	-	115 - 163	-	-67 - -20*	-
80	177 × 100	83 - 100	111 - 135	132 - 187	151 - 212	-76 - -23	-116 - 17
100	221 × 125	104 - 126	140 - 170	167 - 236	189 - 267	-96 - -29	-145 - 21
120	266 × 149	126 - 152	170 - 205	202 - 284	228 - 321	-115 - -35	-174 - 25
150	332 × 187	158 - 191	213 - 258	255 - 357	286 - 403	-143 - -43	-218 - 31
200	443 × 249	212 - 256	286 - 346	343 - 477	383 - 538	-191 - -58	-291 - 42

❶	❷	❸				❹	
Inches	Width × Height	ELPLU03 ELPLU03S	ELPLU04	ELPLW05	ELPLW08	ELPLU03 ELPLU03S ELPLW05	ELPLU04 ELPLW08
250	553 × 311	266 - 320	-	-	-	-239 - -72**	-
300	664 × 374	320 - 385	432 - 521	-	576 - 810	-287 - -87**	-436 - 63
500	1107 × 623	535 - 644	724 - 872	868 - 1202	962 - 1354	-478 - -145	-727 - 104
800	1771 × 996	859 - 1032	1162 - 1399	1394 - 1927	1542 - 2169	-764 - -232	-1163 - 167

* Except for ELPLU03/ELPLU03S.

** Except for ELPLW05.

ELPLW06/ELPLM08

❶	❷	❸		❹	
Inches	Width × Height	ELPLW06	ELPLM08	ELPLW06	ELPLM08
60	133 × 75	154 - 212	-	-87 - 13	-
80	177 × 100	207 - 285	185 - 300	-116 - 17	-76 - -23
100	221 × 125	261 - 358	233 - 376	-145 - 21	-95 - -29
120	266 × 149	315 - 431	280 - 452	-174 - 25	-115 - -35
150	332 × 187	395 - 540	352 - 566	-218 - 31	-143 - -44
200	443 × 249	530 - 723	471 - 757	-291 - 42	-191 - -58
250	553 × 311	-	589 - 947	-	-239 - -73

❶	❷	❸		❹	
Inches	Width × Height	ELPLW06	ELPLM08	ELPLW06	ELPLM08
300	664 × 374	798 - 1088	708 - 1137	-436 - 63	-286 - -87
500	1107 × 623	1336 - 1818	1184 - 1898	-727 - 104	-477 - -145
800	1771 × 996	2142 - 2913	1897 - 3040	-1163 - 167	-764 - -233

ELPLM09/ELPLM15/ELPLM10/ELPLM11/ELPLL08

❶	❷	❸				❹
Inches	Width × Height	ELPLM09 ELPLM15	ELPLM10	ELPLM11	ELPLL08	
60	133 × 75	205 - 336	315 - 486	458 - 706	683 - 968	-87 - 13
80	177 × 100	276 - 450	425 - 653	618 - 949	922 - 1301	-116 - 17
100	221 × 125	347 - 565	534 - 819	779 - 1192	1160 - 1634	-145 - 21
120	266 × 149	417 - 679	644 - 986	939 - 1436	1398 - 1967	-174 - 25
150	332 × 187	524 - 851	808 - 1236	1180 - 1800	1756 - 2467	-218 - 31
200	443 × 249	701 - 1137	1082 - 1652	1581 - 2408	2352 - 3300	-291 - 42
300	664 × 374	1056 - 1710	1629 - 2484	2384 - 3624	3543 - 4965	-436 - 63
500	1107 × 623	1765 - 2855	2724 - 4149	3989 - 6056	5927 - 8296	-727 - 104
800	1771 × 996	2829 - 4573	4366 - 6646	6397 - 9704	9502 - 13293	-1163 - 167

4:3

ELPLU03/ELPLU03S/ELPLU04/ELPLW05/ELPLW08

❶	❷	❸				❹	
Inches	Width × Height	ELPLU03 ELPLU03S	ELPLU04	ELPLW05	ELPLW08	ELPLU03 ELPLU03S ELPLW05	ELPLU04 ELPLW08
60	122 × 91	-	91 - 110	108 - 154	124 - 174	-68 - -24 *	-101 - 9
70	142 × 107	-	-	127 - 180	-	-79 - -28*	-
80	163 × 122	91 - 111	123 - 149	147 - 207	166 - 234	-90 - -32	-134 - 12
100	203 × 152	115 - 139	155 - 188	185 - 260	209 - 294	-113 - -40	-168 - 15
120	244 × 183	139 - 168	187 - 226	224 - 313	251 - 354	-135 - -47	-201 - 18
150	305 × 229	175 - 211	236 - 284	282 - 393	315 - 444	-169 - -59	-252 - 23
200	406 × 305	234 - 282	316 - 381	378 - 526	422 - 594	-226 - -79	-335 - 31
250	508 × 381	293 - 353	-	-	-	-282 - -99**	-
300	610 × 457	353 - 424	477 - 574	-	635 - 893	-339 - -119**	-503 - 46
500	1016 × 762	590 - 709	798 - 961	957 - 1324	1060 - 1491	-564 - -198	-839 - 77
800	1626 × 1219	946 - 1137	1281 - 1541	1536 - 2123	1699 - 2389	-903 - -316	-1342 - 123

* Except for ELPLU03/ELPLU03S.

** Except for ELPLW05.

ELPLW06/ELPLM08

❶	❷	❸		❹	
Inches	Width × Height	ELPLW06	ELPLM08	ELPLW06	ELPLM08
60	122 × 91	170 - 234	-	-101 - 9	-
80	163 × 122	229 - 315	204 - 331	-134 - 12	-90 - -32
100	203 × 152	288 - 395	257 - 415	-168 - 15	-113 - -40
120	244 × 183	348 - 475	309 - 498	-201 - 18	-135 - -48
150	305 × 229	436 - 596	388 - 624	-252 - 23	-169 - -59
200	406 × 305	584 - 797	519 - 834	-335 - 31	-226 - -79
250	508 × 381	-	650 - 1043	-	-282 - -99
300	610 × 457	880 - 1199	781 - 1253	-503 - 46	-338 - -119
500	1016 × 762	1472 - 2003	1305 - 2091	-839 - 77	-564 - -198
800	1626 × 1219	2360 - 3209	2090 - 3349	-1342 - 123	-902 - -317

ELPLM09/ELPLM15/ELPLM10/ELPLM11/ELPLL08

❶	❷	❸				❹
Inches	Width × Height	ELPLM09 ELPLM15	ELPLM10	ELPLM11	ELPLL08	
60	122 × 91	226 - 370	349 - 537	507 - 780	756 - 1069	-101 - 9
80	163 × 122	304 - 497	469 - 720	683 - 1048	1019 - 1436	-134 - 12
100	203 × 152	383 - 623	590 - 904	860 - 1316	1281 - 1803	-168 - 15
120	244 × 183	461 - 749	710 - 1087	1037 - 1584	1544 - 2170	-201 - 18
150	305 × 229	578 - 938	891 - 1362	1302 - 1985	1937 - 2720	-252 - 23
200	406 × 305	773 - 1253	1193 - 1821	1744 - 2655	2594 - 3637	-335 - 31

❶	❷	❸				❹
Inches	Width × Height	ELPLM09 ELPLM15	ELPLM10	ELPLM11	ELPLL08	
300	610 × 457	1164 - 1884	1796 - 2738	2628 - 3995	3906 - 5472	-503 - 46
500	1016 × 762	1945 - 3145	3002 - 4571	4396 - 6673	6531 - 9141	-839 - 77
800	1626 × 1219	3117 - 5037	4810 - 7322	7048 - 10691	10469 - 14645	-1342 - 123

21:9

ELPLU03/ELPLU03S/ELPLU04/ELPLW05/ELPLW08

❶	❷	❸				❹	
Inches	Width × Height	ELPLU03 ELPLU03S	ELPLU04	ELPLW05	ELPLW08	ELPLU03 ELPLU03S ELPLW05	ELPLU04 ELPLW08
60	140 × 60	-	87 - 106	103 - 147	118 - 167	-51 - -9 *	-83 - 23
70	163 × 70	-	-	121 - 173	-	-60 - -10*	-
80	187 × 80	87 - 106	118 - 143	140 - 198	159 - 224	-68 - -12	-110 - 30
100	233 × 100	110 - 133	148 - 180	177 - 249	200 - 281	-85 - -15	-138 - 38
120	280 × 120	133 - 161	179 - 217	214 - 300	241 - 339	-102 - -18	-165 - 45
150	350 × 150	167 - 201	225 - 272	269 - 376	302 - 425	-128 - -22	-206 - 56
200	467 × 200	224 - 270	302 - 365	362 - 504	404 - 568	-170 - -30	-275 - 75
300	700 × 300	338 - 406	456 - 550	-	607 - 855	-255 - -45**	-413 - 113
500	1167 × 500	565 - 679	764 - 920	916 - 1268	1015 - 1428	-426 - -75	-688 - 188

❶	❷	❸				❹	
Inches	Width × Height	ELPLU03 ELPLU03S	ELPLU04	ELPLW05	ELPLW08	ELPLU03 ELPLU03S ELPLW05	ELPLU04 ELPLW08
600	1401 × 600	679 - 816	-	-	-	-511 - -89**	-
800	1868 × 800	906 - 1089	1226 - 1475	1470 - 2032	1626 - 2287	-681 - -119	-1101 - 301

* Except for ELPLU03/ELPLU03S.

** Except for ELPLW05.

ELPLW06/ELPLM08

❶	❷	❸		❹	
Inches	Width × Height	ELPLW06	ELPLM08	ELPLW06	ELPLM08
60	140 × 60	162 - 224	-	-83 - 23	-
80	187 × 80	219 - 301	196 - 317	-110 - 30	-68 - -12
100	233 × 100	276 - 378	246 - 397	-138 - 38	-85 - -15
120	280 × 120	332 - 455	296 - 477	-165 - 45	-102 - -18
150	350 × 150	417 - 570	371 - 597	-206 - 56	-128 - -23
200	467 × 200	559 - 763	496 - 798	-275 - 75	-170 - -30
300	700 × 300	842 - 1148	747 - 1199	-413 - 113	-255 - -45
500	1167 × 500	1409 - 1917	1249 - 2002	-688 - 188	-425 - -75
600	1401 × 600	-	1500 - 2403	-	-510 - -90
800	1868 × 800	2259 - 3072	2001 - 3206	-1101 - 301	-680 - -120

ELPLM09/ELPLM15/ELPLM10/ELPLM11/ELPLL08

❶	❷	❸				❹
Inches	Width × Height	ELPLM09 ELPLM15	ELPLM10	ELPLM11	ELPLL08	
60	140 × 60	216 - 354	333 - 514	484 - 746	722 - 1022	-83 - 23
80	187 × 80	291 - 475	449 - 689	653 - 1002	974 - 1373	-110 - 30
100	233 × 100	366 - 596	564 - 865	823 - 1259	1225 - 1725	-138 - 38
120	280 × 120	441 - 717	680 - 1040	992 - 1515	1476 - 2076	-165 - 45
150	350 × 150	553 - 898	853 - 1304	1246 - 1900	1853 - 2603	-206 - 56
200	467 × 200	740 - 1200	1141 - 1743	1669 - 2541	2482 - 3481	-275 - 75
300	700 × 300	1114 - 1804	1719 - 2620	2515 - 3824	3738 - 5238	-413 - 113
500	1167 × 500	1862 - 3011	2873 - 4376	4208 - 6388	6252 - 8751	-688 - 188
800	1868 × 800	2984 - 4823	4605 - 7010	6747 - 10235	10022 - 14021	-1101 - 301

Item	Specifications
Product name	EB-PU2220B/EB-PU2120W
Dimensions	586 (W) × 185 (H) × 492 (D) mm (not including raised section)
Projection system	RGB liquid crystal shutter
LCD panel size (diagonal)	1.0"
Display method	Poly-silicon TFT active matrix
Resolution	2,304,000 pixels WUXGA (1920 (W) × 1200 (H) dots) × 3
Focus adjustment	Powered
Zoom adjustment	1.0 to 1.6 (Optical Zoom)
Projection lens	Optional lens supported. Standard lens: ELPLM15
Lens Shift	Powered Maximum vertical direction: Approx. ±60% Maximum horizontal direction: Approx. ±18%
Light source	Laser diode
Light source output power	Up to 48.4 W × 10 (484 W)
Wavelength	449 to 461 nm
Light source operation time *1	Light Source Mode: Normal, Quiet: Up to about 20,000 hours Light Source Mode: Extended: Up to about 30,000 hours
Brightness*2	Light Source Mode: Normal: 20,000 lm Light Source Mode: Quiet, Extended: 14,000 lm
Contrast ratio	5,000,000:1 exceeded (Dynamic Contrast Normal/High Speed)
Color reproducibility	Up to 1,070 million colors (Depends on the interface)

Item	Specifications
Scanning frequency	**Analog:** Horizontal: 31 to 92 kHz Vertical: 50 to 85 Hz **HDMI/HDBaseT:** Horizontal: 15 to 135 kHz Vertical: 23.98/24/25/29.97/30/50/59.94/60 Hz **DVI-D:** Horizontal: 15 to 75 kHz Vertical: 23.98/24/29.97/30/50/59.94/60 Hz **SDI (EB-PU2220B):** Horizontal: 15 to 67.5 kHz Vertical: 23.98/24/25/29.97/30/50/59.94/60 Hz
Power supply	100 - 120VAC 50/60 Hz 8.2 A 200 - 240VAC 50/60 Hz 6.6 A
Operating power consumption (100 to 120 V area)	Light Source Mode: Normal, Custom: 810 W
Operating power consumption (220 to 240 V area)	Light Source Mode: Normal, Custom: 1301 W Light Source Mode: Quiet, Extended: 899 W
Standby power consumption	Communication On: 2.0 W Communication Off: 0.4 W
Thermal output (max.)	100 to 120 V area: 2754 BTU/h 220 to 240 V area: 4423 BTU/h
Air flow (max.)	436 CFM
Operating altitude	Altitude 0 to 3,048 m
Operating temperature (when using a single projector installation) *3	Altitude of 0 to 2,286 m: 0 to +50°C (Humidity of 20 to 80%, No condensation) Altitude of 2,287 to 3,048 m: 0 to +45°C (Humidity of 20 to 80%, No condensation)

Item	Specifications
Storage temperature	-10 to +60°C (Humidity of 10 to 90%, No condensation)
Mass (not including lens)	Approx. 24.4 kg
Network	RJ45 (100BASE-TX/10BASE-T) x 1, USB connector (A type) x 1 (wireless LAN unit ELPAP11 Corresponding to IEEE802.11a(5GHz)/b(2.4GHz)/ g(2.4GHz)/n(2.4GHz、5GHz))

*1 Approximate time until the light source brightness decreases to half of its original value. (Assuming the projector is being used in an environment containing airborne particles of 0.04 mg/m3 or less. This is an approximate guide only and may change depending on the projector's usage and surroundings.)

*2 The specifications are when the standard lens is attached.

*3 Light source brightness automatically dims if the surrounding temperature gets too high. (Approximately 40°C at an altitude of 0 to 2,286 m, and approximately 35°C at an altitude of 2,287 to 3,048 m; however, this may vary depending on the surrounding environment.)

This product is also designed for IT power distribution system with phase-to-phase voltage 230V.

The rating label is attached on the bottom of the projector.

Supported Features for Epson Projector Content Manager

Your projector supports the following features and options of the Epson Projector Content Manager software.

Features/Options		
Simultaneous playback		-
Save the playlist to the projector via a network		✓
Settings > **Video Format**	Auto Select	✓
	AVI Format	✓
	MP4 Format	✓

The following table lists the meaning of the safety symbols labeled on the equipment.

No.	Symbol mark	Approved standards	Description
❶		IEC60417 No. 5007	"ON" (power) To indicate connection to the mains.
❷		IEC60417 No. 5008	"OFF" (power) To indicate disconnection from the mains.
❸		IEC60417 No. 5009	Stand-by To identify the switch or switch position by means of which part of the equipment is switched on in order to bring it into the stand-by condition.
❹		ISO7000 No. 0434B, IEC3864-B3.1	Caution To identify general caution when using the product.
❺		IEC60417 No. 5041	Caution, hot surface To indicate that the marked item can be hot and should not be touched without taking care.
❻		IEC60417 No. 6042 ISO3864-B3.6	Caution, risk of electric shock To identify equipment that has risk of electric shock.
❼		IEC60417 No. 5957	For indoor use only To identify electrical equipment designed primarily for indoor use.

No.	Symbol mark	Approved standards	Description
❽		IEC60417 No. 5926	Polarity of d.c. power connector To identify the positive and negative connections (the polarity) on a piece of equipment to which a d.c. power supply may be connected.
❾		—	The same as No. 8.
❿		IEC60417 No. 5001B	Battery, general On battery powered equipment. To identify a device for instance a cover for the battery compartment, or the connector terminals.
⓫		IEC60417 No. 5002	Positioning of cell To identify the battery holder itself and to identify the positioning of the cell(s) inside the battery holder.
⓬		—	The same as No. 11.
⓭		IEC60417 No. 5019	Protective earth To identify any terminal which is intended for connection to an external conductor for protection against electric shock in case of a fault, or the terminal of a protective earth electrode.
⓮	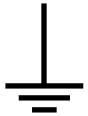	IEC60417 No. 5017	Earth To identify an earth (ground) terminal in cases where neither the symbol No. 13 is explicitly required.

No.	Symbol mark	Approved standards	Description
⑮		IEC60417 No. 5032	Alternating current To indicate on the rating plate that the equipment is suitable for alternating current only; to identify relevant terminals.
⑯		IEC60417 No. 5031	Direct current To indicate on the rating plate that the equipment is suitable for direct current only; to identify relevant terminals.
⑰	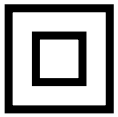	IEC60417 No. 5172	Class II equipment To identify equipment meeting the safety requirements specified for Class II equipment according to IEC 61140.
⑱		ISO 3864	General prohibition To identify actions or operations that are prohibited.
⑲		ISO 3864	Contact prohibition To indicate injury that could occur due to touching a specific part of the equipment.
⑳	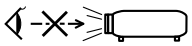	—	Never look into the optical lens while the projector is on.
㉑		—	To indicate that the marked item don't place anything on projector.
㉒		ISO3864 IEC60825-1	Caution, laser radiation To indicate the equipment has a laser radiation part.

No.	Symbol mark	Approved standards	Description
㉓		ISO 3864	Disassembly prohibition To indicate a risk of injury, such as electric shock, if the equipment is disassembled.
㉔		IEC60417 No. 5266	Standby, partial standby To indicate that part of the equipment is in the ready status.
㉕		ISO3864 IEC60417 No. 5057	Caution, movable parts To indicate that you must keep away from movable parts according to protection standards.
㉖		IEC60417 No. 6056	Caution (Moving Fan Blades) As a safety precaution, stay away from the moving fan blades.
㉗		IEC60417 No. 6043	Caution (Sharp Corners) To indicate sharp corners that should not be touched.
㉘		—	To indicate that looking into the lens while projecting is prohibited.
㉙		ISO7010 No. W027 ISO 3864	Warning, Optical radiation (such as UV, visible radiation, IR) Taking care to avoid injury to eyes and skin when in the vicinity of optical radiation.
㉚		IEC60417 No. 5109	Not to be used in residential areas. To identify electrical equipment which is not suitable for a residential area.

This projector is a Class 1 laser product that complies with the IEC/EN60825-1:2014 international standard for lasers.

Follow these safety instructions when using the projector.

⚠ Warning

- Do not open the projector's case. The projector contains a high-powered laser.
- Possibly hazardous optical radiation emitted from this product. Do not look at operating light source. Eye injury may result.
- Do not expose the light from the projector to optical devices, such as a magnifying glass or reflectors. Continuing to use the projector in this condition could cause viewers to feel unwell. It could also cause a fire or accident.
- No direct exposure to the beam shall be permitted, RG3 IEC 62471-5:2015.
- Operators shall control access to the beam within the hazard distance or install the product at a height that will prevent eye exposure within the hazard distance.

⚠ Caution

Do not disassemble the projector when disposing of it. Dispose according to your local or national laws and regulations.

The projector uses a laser as the light source. The laser has the following characteristics.

- Depending on the surroundings, the brightness of the light source may decline. The brightness declines a lot when the temperature gets too high.
- The brightness of the light source declines the longer it is used. You can change the relationship between usage time and decline in brightness settings.

Related Links

• "Laser Warning Labels" p.200

Laser Warning Labels

Laser warning labels are attached on the projector. The labels may vary depending on the country or area of purchase.

Inside



Side

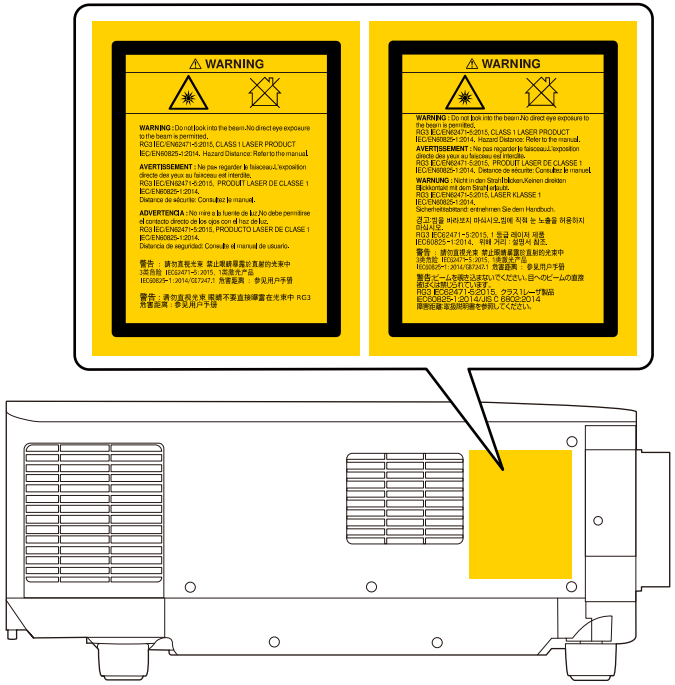

- When turning on the projector at a distance using the remote control, make sure no one is looking into the lens.
- Do not allow small children to operate the projector. Children must be accompanied by an adult.
- Do not look into the lens during projection. Also, do not look into the lens using optical devices, such as a magnifying glass or telescope. This could cause visual impairment.

For North/South America

⚠ Warning

MOUNT ABOVE THE HEADS OF CHILDREN. The use of a ceiling mount is recommended with this product to place it above the eyes of children.

This projector is a Class 1/RG3 laser product that complies with the IEC60825-1:2014 international standard for laser products and the IEC 62471-5:2015 international standard for laser illuminated projectors. This projector also complies with US requirements for LIPs (Laser Illuminated Projectors) via the terms of US FDA CDRH Classification and Requirements for Laser Illuminated Projectors (LIPs) (Laser Notice No. 57) dated May 8, 2019.

This projector can only be installed or used by qualified personnel with an approved laser light show variance. Installers must have a valid variance for production of Class 3B and Class 4 laser light shows and/or for incorporation of the RG3 LIPs into their shows. Dealers, distributors, and end-users are also required to obtain a valid laser light show variance. If you are renting out this projector in the US, it shall only be delivered to parties that demonstrate they have a valid variance in effect at the time of delivery that permits the production of laser light shows incorporating either Class 3B/4 , or RG3 LIP projectors.

Hazard Distance according to IEC62471-5

When using projectors and interchangeable lenses that change to Risk Group 3, no direct exposure to the beam is permitted. Operators must control access to the beam within the hazard distance or install the product at a height that will prevent eye exposure within the hazard distance.

Looking into the lens at the hazard distances closer than those indicated here can cause damage to eyesight.

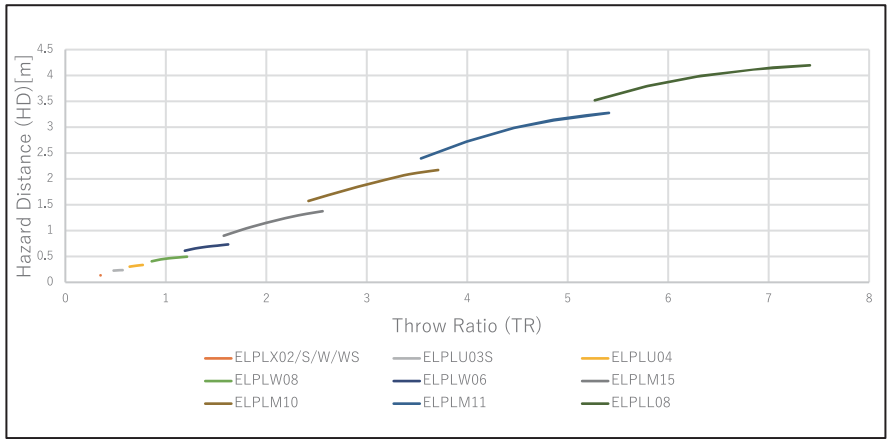

Check these sections for important notices about your projector.

Related Links

- "FCC Compliance Statement" p.203
- "Indication of the manufacturer and the importer in accordance with requirements of EU directive" p.204
- "Restriction of Use" p.204
- "Operating System References" p.204
- "Trademarks" p.204
- "Copyright Notice" p.205
- "Copyright Attribution" p.205

FCC Compliance Statement

Supplier's DECLARATION of CONFORMITY
According to 47CFR, Part 2 and 15
Class A digital devices, peripherals & switching power supplies

We: Epson America, Inc.

Located at: 3131 Katella Avenue, Los Alamitos, CA

Tel: 562-981-3840

Declare under sole responsibility that the product identified herein, complies with 47CFR Part 2 and 15 of the FCC rules as a Class A digital device. Each product marketed, is identical to the representative unit tested and found to be compliant with the standards. Records maintained continue to reflect the equipment being produced can be expected to be within the variation accepted, due to quantity production and testing on a statistical basis as required by 47CFR 2.906. Operation is subject to the following two conditions: (1) this device may not cause harmful interference, and (2) this device must accept any interference received, including interference that may cause undesired operation.

Trade Name: EPSON

Type of Product: LCD Projector

Model: HA63B/HA66B

Options:

Product name	Model
Remote controller	2211396 xx (x=0-9)

FCC Compliance Statement For United States Users

This device complies with part 15 of the FCC Rules. Operation is subject to the following two conditions: (1) This device may not cause harmful interference, and (2) this device must accept any interference received, including interference that may cause undesired operation.

This equipment has been tested and found to comply with the limits for a Class A digital device, pursuant to Part 15 of the FCC Rules. These limits are designed to provide reasonable protection against harmful interference when the equipment is operated in commercial environment. This equipment generates, uses, and can radiate radio frequency energy and, if not installed and used in accordance with the instruction manual, may cause harmful interference to radio communications. Operation of this equipment in residential area is likely to cause harmful interference in which case the user will be required to correct the interference at this own expense.

WARNING

The connection of a non-shielded equipment interface cable to this equipment will invalidate the FCC Certification or Declaration of this device and may cause interference levels which exceed the limits established by the FCC for this equipment. It is the responsibility of the user to obtain and use a shielded equipment interface cable with this device. If this equipment has more than one interface connector, do not leave cables connected to unused interfaces. Changes or modifications not expressly approved by the manufacturer could void the user's authority to operate the equipment.

Indication of the manufacturer and the importer in accordance with requirements of EU directive

Manufacturer: SEIKO EPSON CORPORATION
Address: 3-5, Owa 3-chome, Suwa-shi, Nagano-ken 392-8502 Japan
http://www.epson.com/

Importer: EPSON EUROPE B.V.
EU Address: Atlas Arena, Asia Building, Hoogoorddreef 5,1101 BA Amsterdam Zuidoost The Netherlands
UK Address: Floor 3&4, The Clarendon Works, 37-39 Clarendon Road, Watford WD17 1JA, U.K.
http://www.epson.eu/

Suplier in Middle East, Turkey, Africa, and Central & West Asia: Epson Middle East FZCO
Address: 6WA-401 6W bldg., Dubai Airport Freezone, Dubai, United Arab Emirates
www.epson.com/eme

Restriction of Use

When this product is used for applications requiring high reliability/safety such as transportation devices related to aviation, rail, marine, automotive etc.; disaster prevention devices; various safety devices etc; or functional/precision devices etc, you should use this product only after giving consideration to including fail-safes and redundancies into your design to maintain safety and total system reliability. Because this product was not intended for use in applications requiring extremely high reliability/safety such as aerospace equipment, main communication equipment, nuclear power control equipment, or medical equipment related to direct medical care etc, please make your own judgment on this product's suitability after a full evaluation.

Operating System References

- Microsoft® Windows® 8.1 operating system
- Microsoft® Windows® 10 operating system

In this guide, the operating systems above are referred to as "Windows 8.1" and "Windows 10". Furthermore, the collective term "Windows" is used to refer to them all.

- macOS 10.13.x
- macOS 10.14.x
- macOS 10.15.x
- macOS 11.0.x

In this guide, the collective term "Mac" is used to refer to all of the operating systems above.

Trademarks

Mac, OS X, and macOS are trademarks of Apple Inc.

Microsoft and Windows are trademarks or registered trademarks of Microsoft Corporation in the United States and/or other countries.

WPA2® and WPA3® are trademarks of Wi-Fi Alliance®.

App Store is a service mark of Apple Inc.

Chrome, Chromebook, and Google Play are trademarks of Google LLC.

HDMI, the HDMI Logo and High-Definition Multimedia Interface are trademarks or registered trademarks of HDMI Licensing Administrator, Inc.

"QR Code" is a registered trademark of DENSO WAVE INCORPORATED.

PJLink trademark is a trademark applied for registration or is already registered in Japan, the United States of America and other countries and areas.

Crestron®, Crestron Connected®, Crestron Fusion®, Crestron Control®, and Crestron RoomView® are registered trademarks of Crestron Electronics, Inc.

Art-Net™ Designed by and Copyright Artistic Licence Holdings Ltd.

Intel® is a registered trademark of Intel Corporation in the U.S. and/or other countries.

Extron® and XTP® are registered trademarks of RGB Systems. Incorporated.

HDBaseT™ and the HDBaseT Alliance logo are trademarks of the HDBaseT Alliance.

The N-Mark is a trademark or registered trademark of NFC Forum, Inc. in the United States and in other countries.

Android TV™ is a trademark of Google LLC.

Other product names used herein are also for identification purposes only and may be trademarks of their respective owners. Epson disclaims any and all rights in those marks.

Copyright Notice

All rights reserved. No part of this publication may be reproduced, stored in a retrieval system, or transmitted in any form or by any means, electronic, mechanical, photocopying, recording, or otherwise, without the prior written permission of Seiko Epson Corporation. No patent liability is assumed with respect to the use of the information contained herein. Neither is any liability assumed for damages resulting from the use of the information contained herein.

Neither Seiko Epson Corporation nor its affiliates shall be liable to the purchaser of this product or third parties for damages, losses, costs, or expenses incurred by the purchaser or third parties as a result of: accident, misuse, or abuse of this product or unauthorized modifications, repairs, or alterations to this product, or (excluding the U.S.) failure to strictly comply with Seiko Epson Corporation's operating and maintenance instructions.

Seiko Epson Corporation shall not be liable against any damages or problems arising from the use of any options or any consumable products other than those designated as Original Epson Products or Epson Approved Products by Seiko Epson Corporation.

The contents of this guide may be changed or updated without further notice.

Illustrations in this guide and the actual projector may differ.

Copyright Attribution

This information is subject to change without notice.

© 2022 Seiko Epson Corporation

2025.05 414265505EN